529-11

Cleaver Brooks®

AIR PUMP MODULE

FOR ATOMIZATION OF FUEL OIL

PRINCIPLES OF OPERATION
SERVICE AND MAINTENANCE
REPLACEMENT INSTRUCTIONS
PARTS LIST

Cleaver Brooks®
DIVISION OF AQUA-CHEM, INC.
MILWAUKEE, WISCONSIN, U.S.A.

C9-5422
Printed in U.S.A.

AIR PUMP MODULE

PRINCIPLES OF OPERATION

The air used for atomization of fuel oil on Cleaver-Brooks burners is supplied by a positive displacement rotary air compressor of a sliding vane type. This provides a constant volume of low pressure air.

On certain models of firetube boilers and on all Model BR and CN burners for watertube boilers, Model BR & CN industrial burners, the air pump is provided in a module that includes an electric motor, an air-oil receiver tank, air strainer and a lube oil cooling coil. Typical modules are shown in Figures 1 and 2.

In operation, ambient air enters the pump through the oil bath filter. The air is compressed in the ever narrowing chamber formed between the sliding blades, the rotor, and the pump housing. The compressed air flows into the air-oil receiver tank.

The air-oil receiver tank provides a reservoir of lube oil and contains filtering material and baffles that separate the lube oil from the compressed air and the air leaving the tank and flowing to the burner is relatively free of lube oil.

The air pressure within the tank also forces sufficient lubricating oil from the tank to the pump to lubricate its bearings and also to provide a seal and lubrication for the pump vanes.

The act of compressing air creates heat, which is absorbed in part by the constant flow of lube oil. As a result, the air delivered to the tank contains hot oil. A fan attached to the compressor draws cooling air over a coil to remove this heat before the oil enters the pump. The oil also flows through a strainer and a fixed orifice that regulates flow. Since the same oil is used over and over, it is essential that it be clean and free of foreign matter that could damage or cause excessive wear to the compressor.

It is normal for some oil to be lost during this process and the life of the pump is dependent upon a sufficient supply of clean, cool lubricating oil and it is imperative that replacement oil be added as required.

MODULE COMPONENTS

AIR PUMP

A rotary sliding vane type, designed and manufactured by Cleaver-Brooks. The size varies with the burner size and the pump is commonly identified by the length of the pump housing. These are 2″, 2¾″, 5″ and 10″. The pumps are built to close tolerances and are not to be disassembled or repaired in the field.

AIR PUMP MOTOR

The motor drives the pump through a flexible coupling. It is started and stopped simultaneously with the forced draft fan motor as controlled by the sequence of the burner programming control. Motor size varies with pump size. The motor is nominally rated at 1,800 RPM and rotation is counter clockwise when viewed from shaft end.

AIR FILTER

An oil bath type filter to clean the air supply prior to entering air pump.

CHECK VALVE

Prevents lubricating oil and compressed air from surging back through the pump and air filter when the pump stops.

AIR-OIL RECEIVER TANK

Holds supply of oil for lubricating the air pump. Separates lube oil from atomizing air before delivery to nozzle.

LUBE OIL LEVEL SIGHT GLASS

Indicates the level of lubricating oil in the air-oil receiver tank.

LUBE OIL COOLING COIL

Cools the lubricating oil before it enters the air pump. A fan driven by the air pump motor circulates cooling air over the coil.

LUBE OIL STRAINER

Filters lubricating oil before it enters the air pump.

LUBE OIL FUEL PIPE AND STRAINER

Used when adding oil to the air-oil receiver tank. See lubrication instructions.

SERVICE AND MAINTENANCE

AIR PUMP

The air pump itself requires little maintenance, however, the life of the pump is dependent upon a sufficient supply of clean cool lubricating oil. The oil level in the air-oil tank must be observed closely. Lack of oil will damage the pump making replacement necessary. Disassembly or field repairs to the pump are not recommended.

Keep the motor and other components free from dust and dirt to prevent overheating and damage. Motor lubrication should follow manufacturers' recommendations. Check coupling alignment frequently and replace coupling insert as required. Keep coupling guard in place.

LUBRICATING OIL

Lubricating oil must be visible in the gauge glass at all times. There is no specific level required as long as oil is visible.

Oil with proper viscosity must be used. SAE20 detergent is recommended although SAE10 detergent is also permissible. Name brands known to perform satisfac-

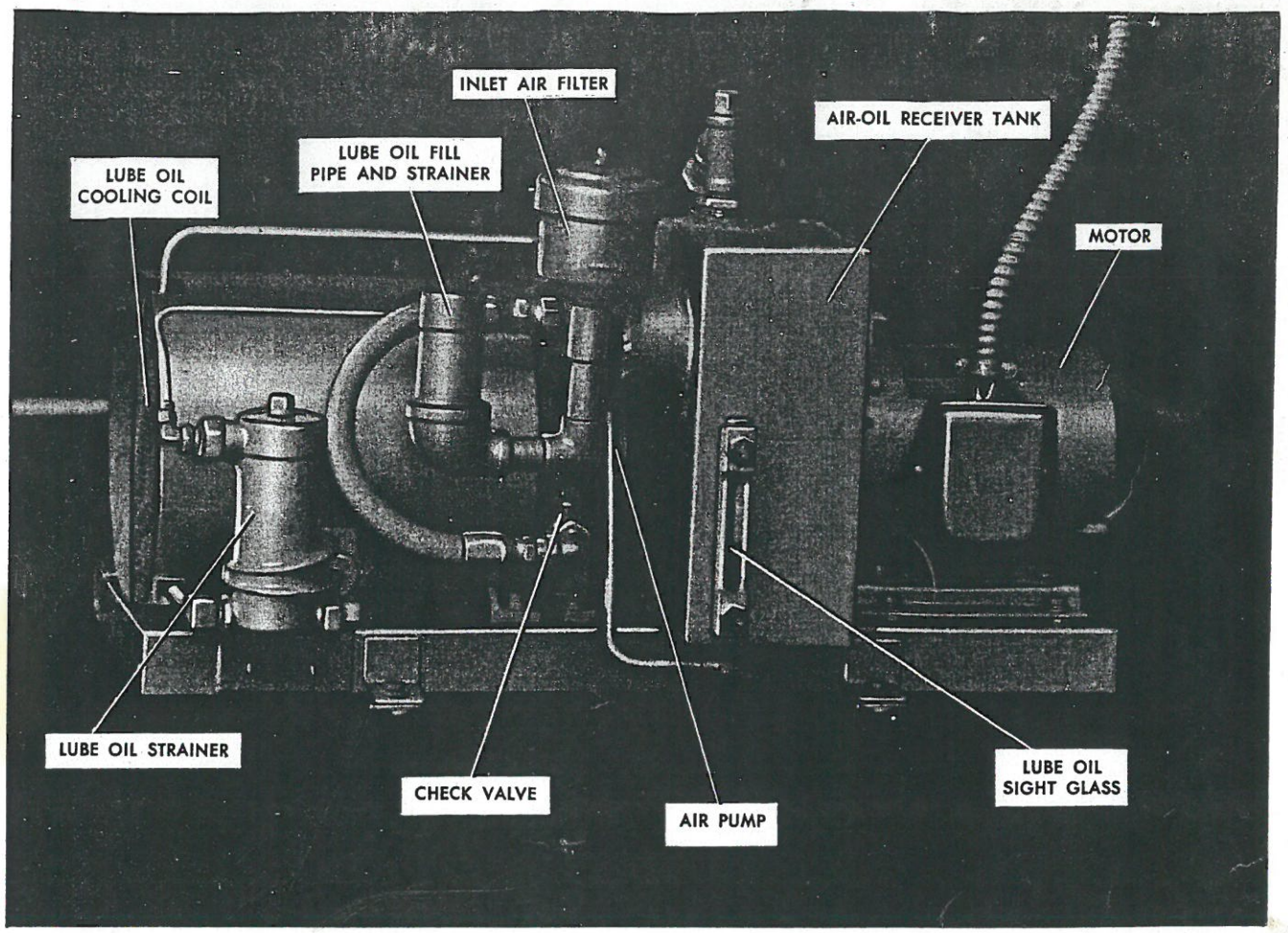

FIGURE 1. TYPICAL AIR PUMP MODULE
FIRETUBE BOILERS AND MODEL BR BURNER

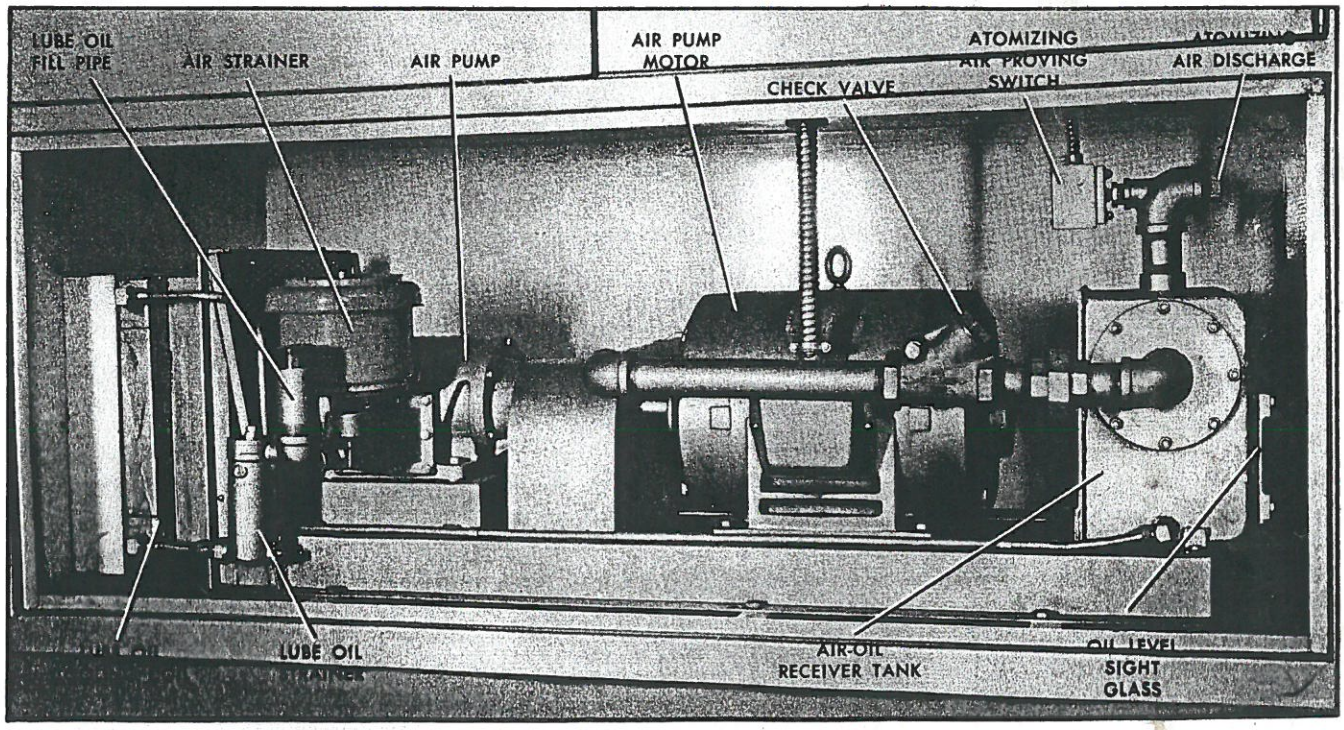

FIGURE 2. TYPICAL AIR PUMP MODULE
MODEL CN BURNER

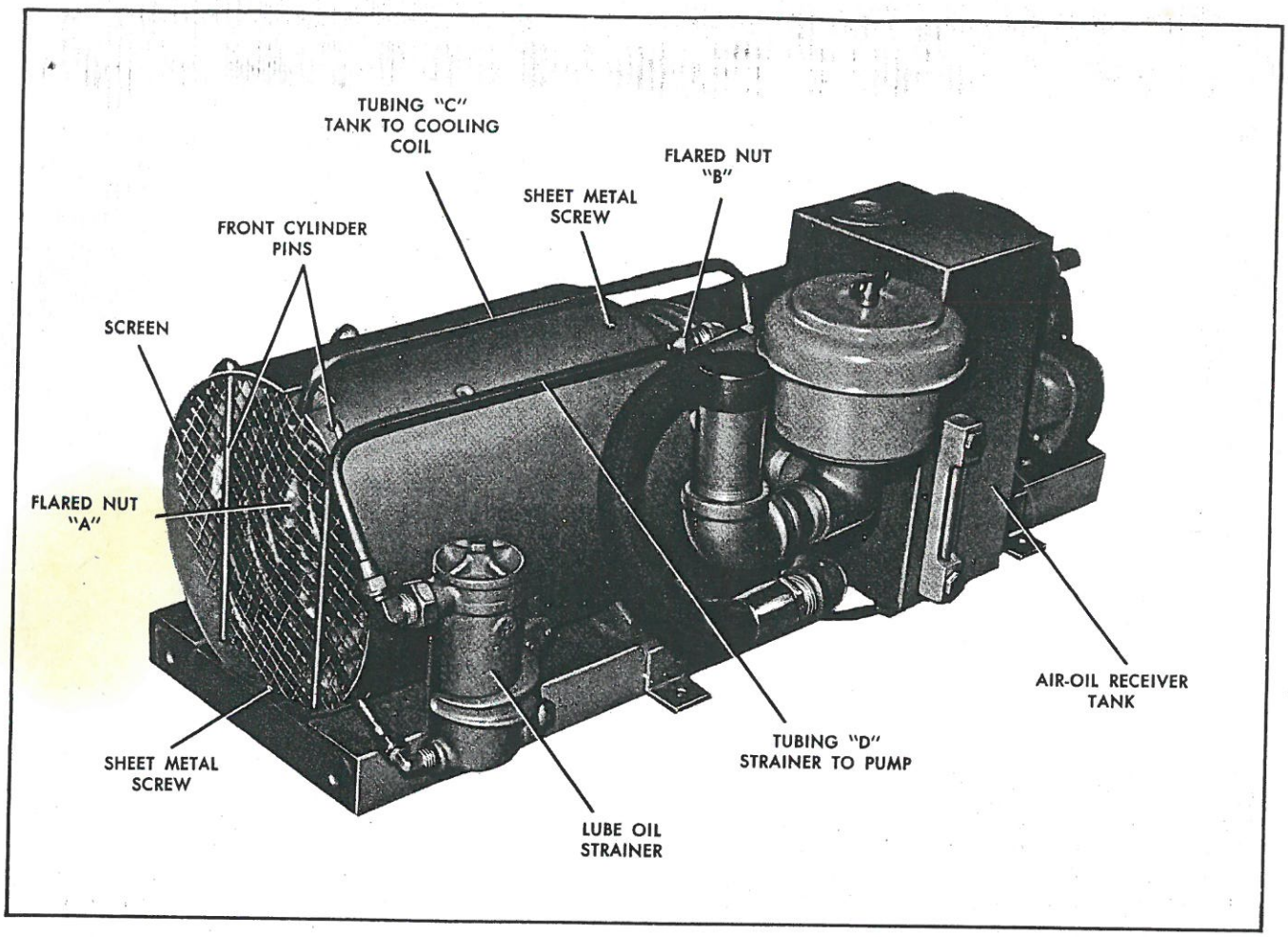

FIGURE 3. AIR PUMP MODULE DETAILS

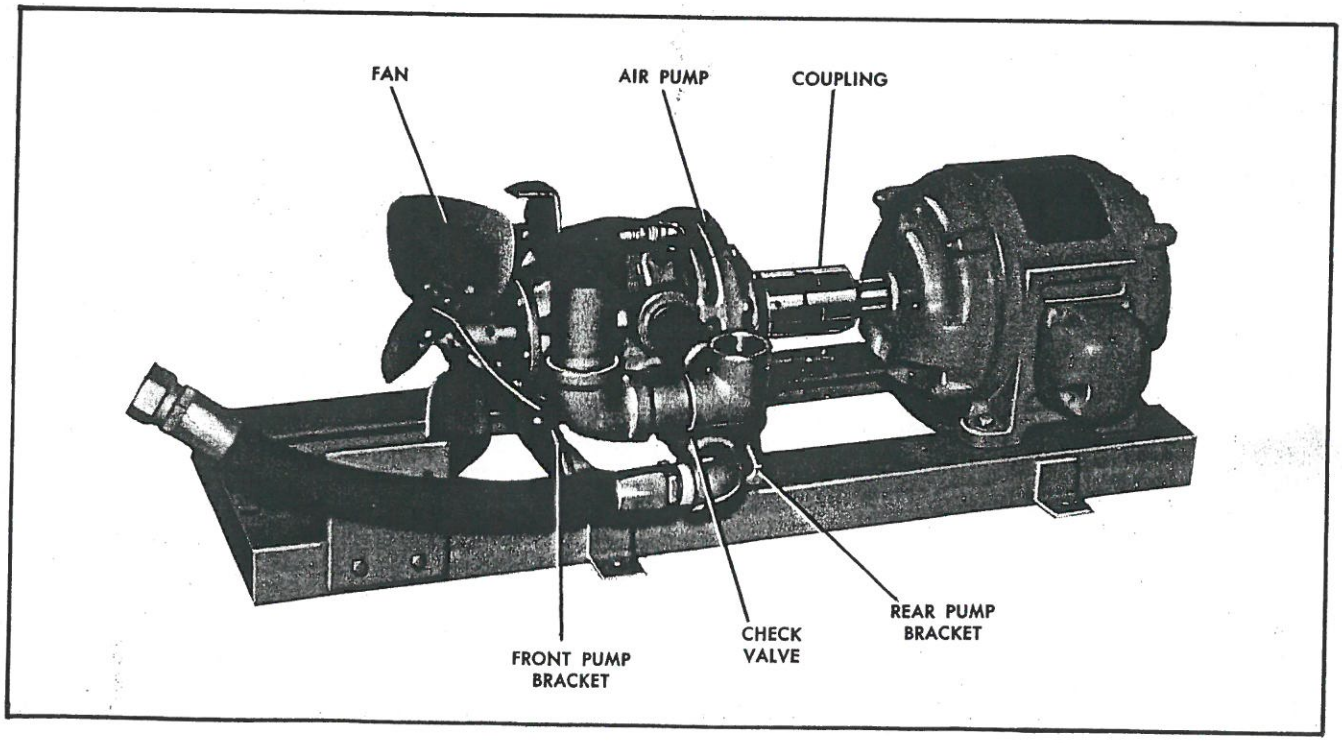

FIGURE 4. AIR PUMP MODULE DETAILS

torily include Havoline (Texaco), Mobil Oil (Mobil), Shell X100 and Permalube (American).

Follow this procedure when adding oil:

Remove the cover from the fill pipe and add oil through the conical strainer in this pipe *with the unit running*. Oil must never be added unless pump is in operation.

The strainer in the fill line serves two purposes, first of which is obviously to prevent foreign material from entering the pump. The second is to provide a means of restricting the flow rate at which oil is added. Do not attempt to by-pass this feature either by removing the screen or by adding oil through the air cleaner opening since this may permit the addition of a greater quantity of oil than the pump can normally absorb, placing excessive strain on the blades, possibly breaking them, or overloading the motor.

The oil and its containers should be clean. Although there is a strainer in the lube oil line its purpose is to remove any unwanted materials rather than to act as a filter for unclean oil.

LUBE OIL STRAINER

The lube oil strainer screen must be removed and cleaned at regular intervals. It is advisable to remove this screen each month and clean thoroughly by immersing in solvent and blowing dry with compressed air. To remove, loosen cover cap screw being careful not to lose the copper gasket. Tap strainer cover gently to loosen. Check cover gasket. Slip pliers into the cross on the top of the strainer and twist counterclockwise to remove basket. Re-assemble strainer in reverse order.

The cone shaped strainer in the oil inlet tube should also be cleaned periodically. Do not add oil unless this screen is in place.

AIR-OIL TANK

Pads of steel wool are used in this tank as a filtering medium to separate the lube oil from the compressed air. Figure 5 shows a cross section of a tank and the location of the steel wool.

These pads play a very important role and should be replaced periodically. It is also important that a proper grade of steel wool be used. We recommend No. 3 coarse grade Brillo Supreme or equal (CB919-124). Do not substitute other grades! The 2″, 2¾″, and 5″ pump modules require 3 pads while the 10″ requires 6 pads.

When replacing the wool, insert 2 pads, (5 on the 10″) into the cylinder. Alternate the grain of the pads. Install the spacer with its stub end toward the opening and fit one pad over the stub. Be careful not to overly compress the wool and be sure that it is fluffed out to fill all available space. Improper packing can cause high oil consumption. After the last pad is in place, slip retainer screen onto the cylinder. Be sure to fit o-ring gasket under the cover so that a tight seal is obtained.

Follow previous instructions for oil replacement.

AIR CLEANER

Never operate the air pump without the air cleaner in place. The cleaner itself must be periodically checked and its element flushed and cleaned. The correct level of oil must be maintained in the cleaner.

LUBE OIL COOLING COIL

The fins on the tubing must be kept clean and free of any dust or dirt that would impede air flow and cause overheating. Use an air hose to blow away debris. Internal cleaning of the tubes is seldom required if a good quality lube oil is used.

FLEXIBLE COUPLING ALIGNMENT

Alignment of the pump and motor through the flexible coupling is of extreme importance for trouble free operation.

The most commonly used tool for checking alignment is a small straightedge. While some can gauge the amount of misalignment by eye, it is better to use a thickness gauge.

The coupling must be checked for both parallel (offset) alignment and angular (gap) alignment. Parallel misalignment exists when shaft axes are parallel but not concentric (See Figure 6). Angular misalignment is the reverse situation—shaft axes concentric but not parallel.

Checking parallel alignment, both horizontal and vertical, can be accomplished by laying a straightedge across the coupling halves and checking with a thickness gauge to obtain the amount of misalignment. This check should be done on the top of the coupling and

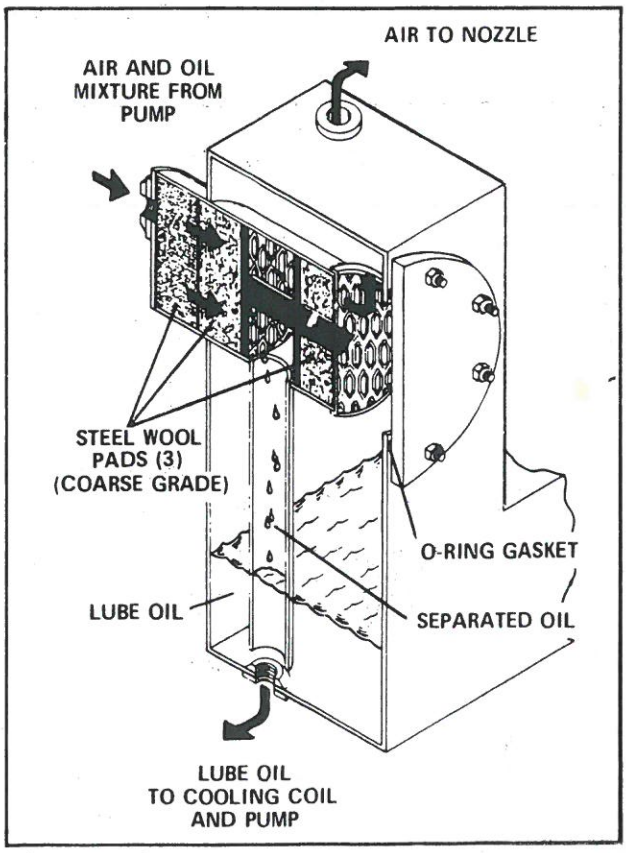

FIGURE 5. AIR-OIL RECEIVER TANK

at least at one 90° interval. If possible, checking at four 90° intervals is best. A useful hint is to hold a flashlight behind the straightedge so that any gap can readily be seen.

Shim stock of appropriate thickness and area is then used under either the feet of the pump or the motor to establish parallel alignment. .008″ tolerance is a permissible limit.

After parallel alignment is established, check for angular alignment. This is done by checking the gap between coupling halves. The coupling should have a minimum gap of 1/16″ and a maximum of 3/32″.

Set the spacing between the halves at one point by using a thickness gauge and then rotate the coupling slowly to be sure that the halves are the same distance apart at all points. Adjust to obtain proper gap by loosening the hold down bolts and shifting either the pump or the motor as required. Generally, a slight tapping on either the front or rear legs is all that is needed to obtain lateral adjustment. Rear legs may require shimming for vertical correction. Tighten the hold down bolts after adjustments are made.

Calipers can also be used in checking angular alignment. Measure the overall distance of the outer ends of the coupling halves at 90° intervals. Shift the pump or motor as required so that the ends of the coupling are the same distance apart at all points. The coupling will then have proper angular alignment.

Remember that alignment in one direction may alter the alignment in another. Recheck thoroughly both angular and parallel alignment procedures after making any alteration.

A properly aligned coupling will last a long time and will provide trouble-free mechanical operation.

AIR PUMP REPLACEMENT SIZES 2″–2¾″–5″

Depending upon boiler room conditions and available space, it may be advisable to remove the entire module

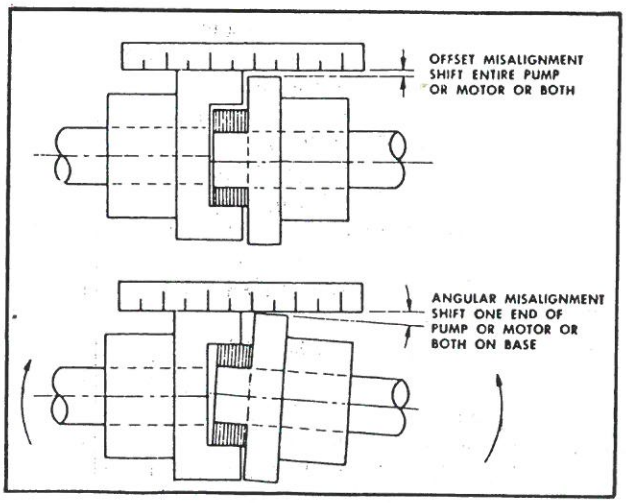

FIGURE 6

to facilitate dismantling. On some models of the BR burners removable slide rails are provided for this purpose. If the module is removed, disconnect the electrical leads and properly tag them.

Refer to Figures 3 and 4 for identification of various components and use the following procedures in replacing the pump.

DIS-MANTLING

1. Lift out the two front cylinder pins that hold screen and remove screen.

2. Disconnect flared nut "A" and lift tubing "C" high enough to prevent drainage of lubricating oil from the tank. Disconnect flared nut "B" on the pump end of tubing "D."

3. Remove the two sheet metal screws that hold cylinder in place. Unfasten clamp holding oil strainer.

4. Remove entire heat exchange assembly consisting of the cylinder, the finned tubing, and the oil strainer.

5. Remove fan from air pump.

6. Disconnect flexible air line from the lube tank.

7. Remove coupling guard by pushing in on both sides until it clears clamp.

8. Loosen clamp at rear of tank and remove tank with copper tubing "C" attached.

9. Leave the rear pump bracket in place to aid in re-alignment of replacement pump. Do this by removing the two cap screws that extend through the bracket into the pump housing. Temporarily leave the front bracket attached to pump.

10. Remove screws holding front bracket to base and lift off the pump with its attachments. Note location of the pipe fittings and brackets prior to removing for installation on replacement pump. If piping is dismantled be sure that the check valve is re-installed so that the gate swings towards pump.

REASSEMBLY

Reassembly should take place in reverse order of disassembly. With the rear pump bracket left in place, re-alignment and spacing between the pump shaft and the motor shaft is greatly simplified. There should be approximately ⅞″ space between the two shafts. Place the coupling insert between the coupling halves prior to reassembly. Check to see that both shafts rotate freely.

Refer to section on coupling alignment instructions.

If shims were used originally under either pump brackets or motor feet be sure that they are correctly re-installed.

When re-installing fan slide it on to the compressor shaft until the hub is bottomed. Tighten the setscrew against the key first then tighten setscrew against the shaft. Clean or remove any dust or grime from blades prior to re-installing.

When replacing retainer screen a slight force may be

required to push the cooling coil into the air cylinder so that pins may be fitted into place.

Make sure that all piping connections are tight.

If motor was replaced or if motor leads were disconnected, make sure that pump rotation is proper before starting operation. The air pump should rotate in a clockwise direction viewed from the drive shaft end.

AIR PUMP REPLACEMENT SIZE 10"

1. Disconnect union in pump discharge line. See Figure 2.

2. Remove coupling guard and fan guard.

3. Disconnect the flared nut closest to the cooling coil on the tubing between the coil and the lube oil strainer. Be alert to possible spillage of lube oil.

4. Remove capscrews holding pump to base and remove pump and attachments.

5. Remove fan from pump.

6. Remove inlet casting and piping from pump.

7. Install removed components on replacement pump. If piping was dismantled be sure that the check valve is reinstalled so that the gate swings toward the pump.

8. When reinstalling pump on base, carefully check the spacing between shafts and the coupling alignment. Refer to section on coupling alignment instructions.

9. To prevent a piping strain on the pump, slots are provided in the mounting base of the air-oil tank to provide the necessary adjustment for the mating parts of the union to touch. Make sure that all piping connections are tight.

10. Replace coupling and fan guards.

11. If motor was replaced or if leads were disconnected make sure that pump rotation is proper before starting operation. The air pump should rotate in a clockwise direction viewed from the drive shaft end.

PARTS LIST

Part Number	Quantity	DESCRIPTION	Usage of Comments
505-107	1	Pump, Air, 2"	CB 50-100
505-108	1	Pump, Air, 2¾"	CB 125-350
505-98	1	Pump, Air, 5"	CB400-700, BR Burner
505-97	1	Pump, Air, 10"	CN Burner
32-1783	1	Gasket, Inlet Manifold	10" Pump
819-115	1	Coupling, Flexible, ⅞" x 1" Lovejoy L100	2" Pump
819-20	1	Coupling, Flexible, 1⅛" x 1" Lovejoy L100	2¾", 5" Pump
819-181	1	Coupling, Flexible, 1⅜" x 1⅜" Lovejoy L110	10" Pump
819-56	1	Insert, For L100 Coupling	
819-217	1	Insert, For L110 Coupling	
919-124	3	Pad, Steel Wool, #3 Coarse	6 Req'd 10" Pump
853-879	1	O-Ring, Tank Cover	2" thru 5" Pumps
853-821	1	O-Ring, Tank Cover	10" Pump
529-11	1	Strainer, Lube Oil	
171-28	1	Basket, Strainer	For 529-11
32-350	1	Gasket, Strainer Cover	For 529-11
32-351	1	Gasket, Strainer Bolt	For 529-11
171-114	1	Basket, Oil Inlet Filter	
919-122	1	Cap, Oil Inlet Pipe	
923-79	1	Air Filter, ¾"	2", 2¾" Pump
843-82	1	Air Filter, 1¼"	5" Pump
843-238	1	Air Filter, 1½"	10" Pump
861-345	1	Hose, Air	2", 2¾" Pump
861-346	1	Hose, Air	5" Pump
813-123	1	Fan, Cooling	2", 2¾" Pump
813-146	1	Fan, Cooling	5" Pump
813-124	1	Hub, Cooling Fan	For 813-123 & 813-146
813-85	2	Fan Blade, Cooling	10" Pump
41-110	1	Hub, Fan	For 813-85
850-647	1	Oil Sight Gauge	
880-102	1	Glass and O-Rings, Oil Sight Gauge	For 850-647
8-1369		Lens	
		NOTE: Motors are not listed due to the many variations in sizes and current characteristics. When ordering, please furnish nameplate data and serial number of boiler or burner.	

September 29, 2008

Service Bulletin

To All Cleaver-Brooks, Inc. Representatives
RE: CB08-91 Air pump lube oil

Both the Cleaver-Brooks service and parts departments have been receiving numerous calls regarding problems finding single weight motor oils for the air pumps. The Thomasville plant has been using "Exxon NUTO H68" for approximately two years now. This oil meets AW ISO 68 specifications and there are numerous other oils that meet the same specifications;

Chevron AW Hydraulic Oil
AW68 Hydraulic Oil (CITGO)
Conoco Super Hydraulic 68
Crown Premium Hydraulic AW-68
Exxon NUTO H-ISO-68
Mobil Hydraulic Oil AW-68

Our Stratford facility has been using Mineralube 10W (Hydraulic Oil) for several years now in their air pumps shipped.

The above mentioned oils may be used as an alternative to the SAE 20 weight and SAE 10 weight oil that is called for in the Cleaver-Brooks manuals.

Note: The Recommended Lube Oils Listed are Not Available From CB Aftermarket Parts and Must be Obtained From Other Sources.

ITEM	REQ.	PART NO.	DESCRIPTION
1	1	"G"	COMPRESSOR BASE ASSEMBLY
2	"C"	003–00550–000	BASE MOTOR ASSEMBLY
3	1	507–05637–000	TUBING ASSY, FINNED TUBING TO COMPRESSOR
4	1	538–00125–000	AIR OIL TANK ASSY.
5	1	505–00107–000	PUMP, AIR ASSEMBLY
6	1	651–00262–000	TUBING, FINNED
7	1	023–00124–000	CYLINDER, FINNED TUBING
8	4	056–00277–000	PIN, CYLINDER
9	1	819–00136–000	COUPLING, HALF, 1" BORE 1/4" W/ 1/8" KEYWAY
10	1	035–00322–000	COUPLING GUARD
11	1	858–00088–000	PIPE PLUG, 1/8"
12	1	857–00129–000	NIPPLE, 1/4" x 1–1/2" LG. SCH. 40
13	1	277–00171–000	ORIFICE–A, #55 DRILL
14	1	841–00060–000	KEY, 3/16" x 3/16" x 7/8" LG.
15	2	813–00146–000	FAN BLADE
16	1	507–03011–000	TUBING, COMPRESSOR ASSEMBLY
17	1	923–00079–000	CLEANER, AIR, 3/4" NPT.
18	2	008–01869–000	BRACKET, COMPRESSOR
19	1	008–01874–000	BRACKET, HEAT EXCHANGER
20	1	072–00048–000	SCREEN, FINNED TUBING
21	"D"	952–00133–000	WASHER, 5/16"
22	1	845–00073–000	UNION, FLARED, 3/8" ODC.
23	1	845–00426–000	UNION, ELBOW, 3/8" ODC.
24	1	845–00202–000	ELBOW, MALE, 3/8" ODC. x 1/4" NPT.
25	1	845–00263–000	ELBOW, MALE, 3/8" ODC. x 3/8" NPT.
26	1	845–00183–000	NUT, 3/8" ODC.
27	1	847–00056–000	BUSHING, REDUCER, 1" x 1/2" NPT.
28	1	940–03656–000	VALVE, SWING CHECK, 1/2" NPT.
29	1	861–00345–000	HOSE, FLEXIBLE
30	1	857–00153–000	NIPPLE, 1/2" x 1–1/2" LG.
31	1	859–00118–000	STREET ELBOW, 1/2" NPT. x 45°
32	1	861–00347–000	ADAPTER, 1/2" MPT. x 7/8" –14 MPT.
33	1	847–00152–000	BUSHING, RED, 3/4" x 1/2"
34	1	171–00114–000	FILTER BASKET
35	1	825–00104–000	GAS COCK, TEE HEAD– 3/4" NPT.
36	2	857–00163–000	NIPPLE, 3/4" x CLOSE
37	1	859–00025–000	TEE, 3/4" 150 LB.
38	1	857–00166–000	NIPPLE, 3/4" x 2" LG.
39	1	847–01628–000	ELBOW, REDUCING, 1–1/2" x 3/4"
40	1	157–01217–000	FITTING ASSEMBLY, PIPE, FILTER
41	1	919–00194–000	CAP,1–1/2" CAPLUG #CD–24
42	2	857–00167–000	NIPPLE, 3/4" x 2–1/2" LG.
43	8	868–00056–000	CAPSCREW, HEX HD, 3/8"–16 UNC x 1" LG.
44	10	952–00093–000	LOCKWASHER, 3/8"
45	10	952–00106–000	WASHER, 3/8"
46	"E"	868–00104–000	CAPSCREW, HEX HD, 5/16–18 UNC x 1" LG.
47	"F"	952–00114–000	LOCKWASHER, 5/16"
48	1	868–00450–000	CAPSCREW, HEX HD, 3/8"–16 x 4" LG.
49	1	859–00081–000	ELBOW, 3/4" 150 LB.
50	–	---	N/A
51	2	841–00804–000	SCREW, SELF–TAPPING #10–32 x 3/8" LG.
52	2	952–00117–000	LOCKWASHER, #10
53	1	952–00144–000	WASHER, 3/8"
54	1	813–00124–000	FAN BUSHING
55	1	819–00056–000	INSERT, COUPLING
56	–	---	N/A
57	–	---	N/A
58	–	---	N/A
59	–	---	N/A
60	1	868–00157–000	CAPSCREW, HEXHEAD, 3/8"–16 UNC x 1–1/4" LG.
61	1	015–00048–000	CLAMP, AIR OIL TANK
62	1	858–00022–000	COUPLING, 3/4"
63	2	015–00053–000	CLAMP, MOTOR

ASS'Y NO.	USAGE	MTR FRAME	"C"	"D"	"E"	"F"	"G"
615–00018–000	CB 48"	145T	1	4	4	4	003–00555–000
615–00023–000	CBE, CEW, ICB, & 4WG 60" & 78"	182T/184T	0	0	0	0	003–01326–000

ASSEMBLY PROCEDURE

1. ASSEMBLE THE AIR COMPRESSOR TO THE BASE. WITH THE USE OF SHIMS, ADJUST THE CENTERLINE OF THE AIR COMPRESSOR TO WITHIN .008". NOTE DETAIL "B" FOR COUPLING ASSEMBLY. SECURE THE AIR COMPRESSOR TIGHTLY TO THE BASE.
2. SLIDE THE FAN ONTO THE SHAFT UNTIL IT IS BOTTOMED. TIGHTEN THE SETSCREW AGAINST THE KEY FIRST, THEN TIGHTEN THE SETSCREW AGAINST THE SHAFT.
3. BOLT THE TANK TO THE BASE.
4. FIT THE PIPING AS SHOWN.
5. CUT TUBE 3 TO SUIT, INSTALL NUT 26 & FLARE AT ASSEMBLY.

NOTES:

1. FAN SHOULD BE ASSEMBLED SUCH THAT THE SIDE OF THE BLADE 15 MARKED BLOWER IS TOWARD THE HUB 54.

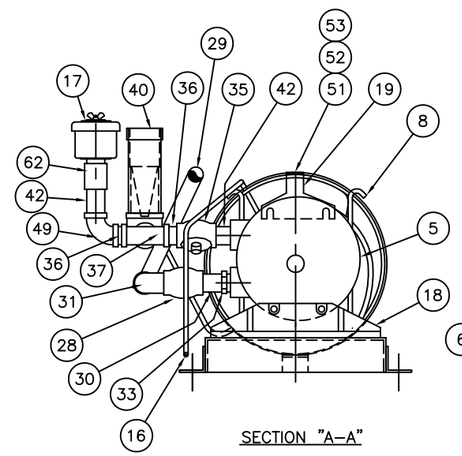

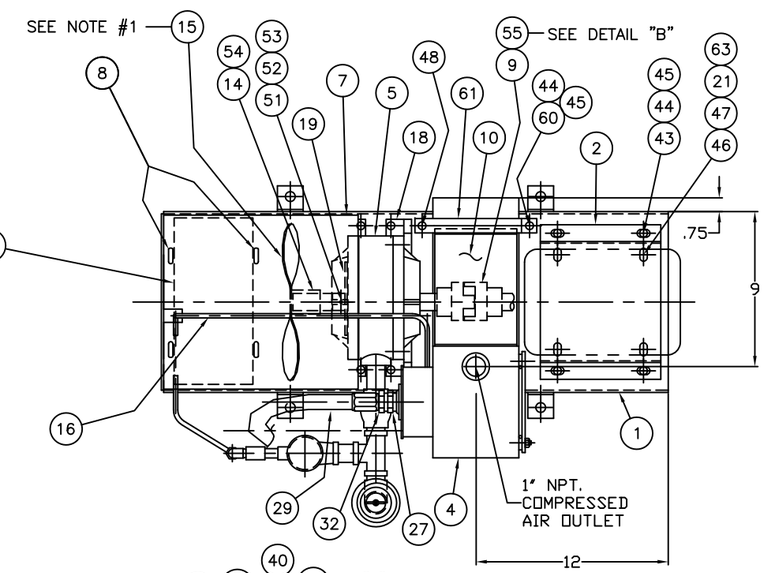

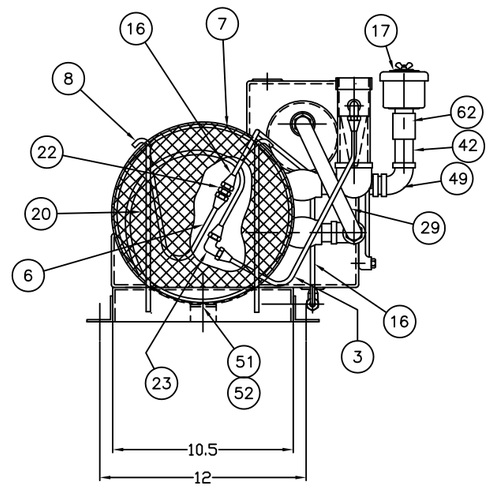

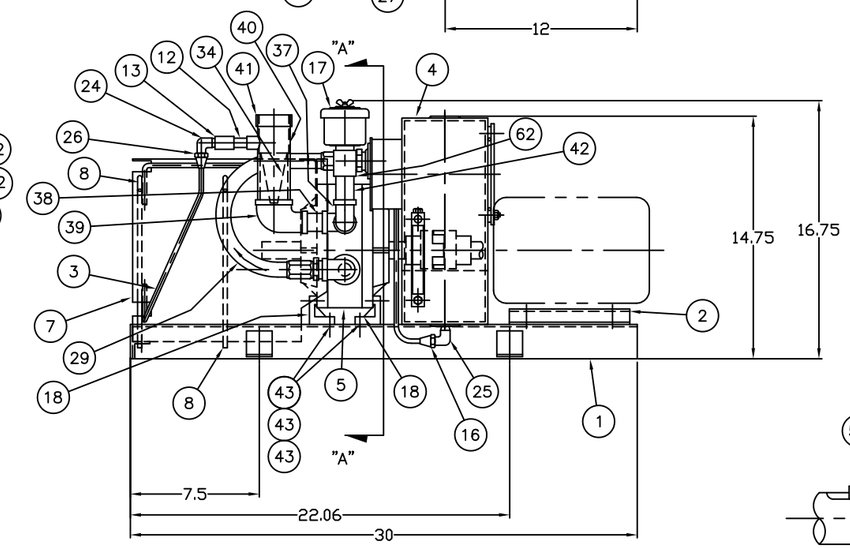

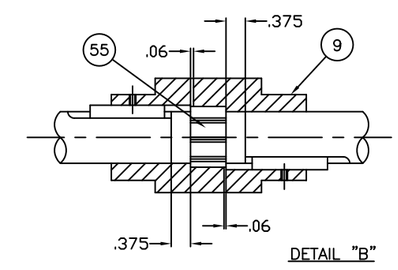

Return to Table of Contents

USED FOR MODELS
CB 48" DIA., 60 HZ
CBE, CEW, ICB, & 4WG 60" & 78" DIA., 60 HZ

REVISIONS
EN#
DATE

615 00018

ALL MATERIAL SIZES ON BILL OF MATERIAL ARE FOR REFERENCE ONLY. DRAWING DIMENSIONS MUST BE FOLLOWED.
TOLERANCE, UNLESS OTHERWISE SPECIFIED:
FRACTIONAL ± DECIMAL ±
HOLE LOCATIONS ± ANGLES ±
DRILLED, PUNCHED OR SLOTTED HOLES ± .010

SHT 01 OF 01

SCALE N.T.S.
DATE 10/29/97
DRAWN PMYSL
SIZE D

CleaverBrooks

COMPRESSOR ASSEMBLY 2", FOR MTR FRAMES 145T,182T,184T

DRWG. NO. 615–00018–000AFT 18

NOTES:
1. ASSEMBLE THE MOTOR & AIR COMPRESSOR TO THE BASE WITH THE USE OF SHIMS. ADJUST THE CENTERLINES OF THE AIR COMPRESSOR TO WITHIN .009 IN NOTE DETAIL B FOR COUPLING ASSEMBLY, SECURE MOTOR & COMPRESSOR TIGHTLY TO THE BASE.
2. SLIDE THE FAN ONTO THE SHAFT UNTIL IT IS BOTTOMED. TIGHTEN THE SETSCREW AGAINST THE KEY FIRST, THEN TIGHTEN THE SETSCREW AGAINST THE SHAFT.
3. BOLT THE TANK TO THE BASE.
4. FIT THE PIPING AS SHOWN.
5. CUT TUBE (15) TO SUIT, INSTALL NUT (34) & FLARE @ ASS'Y.

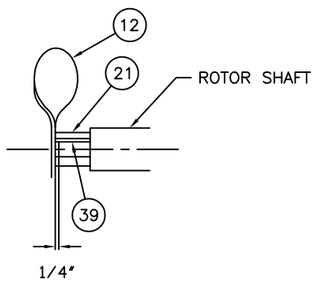

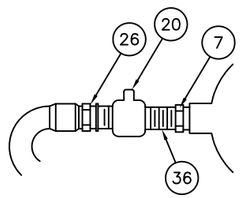

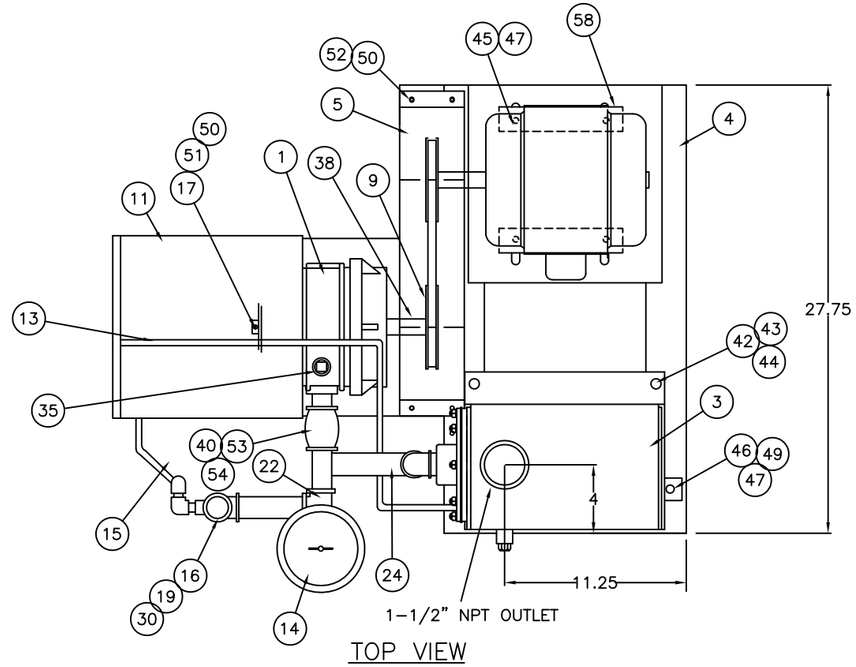

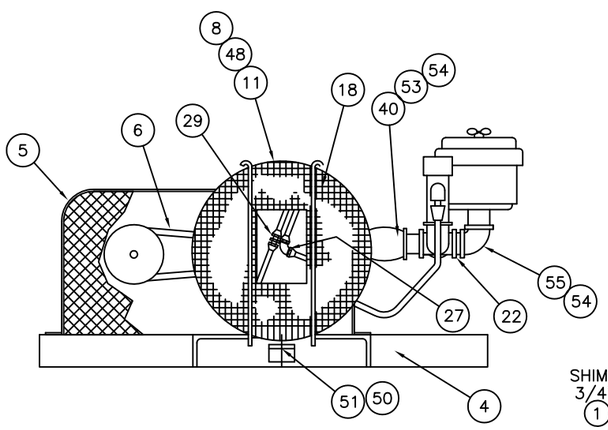

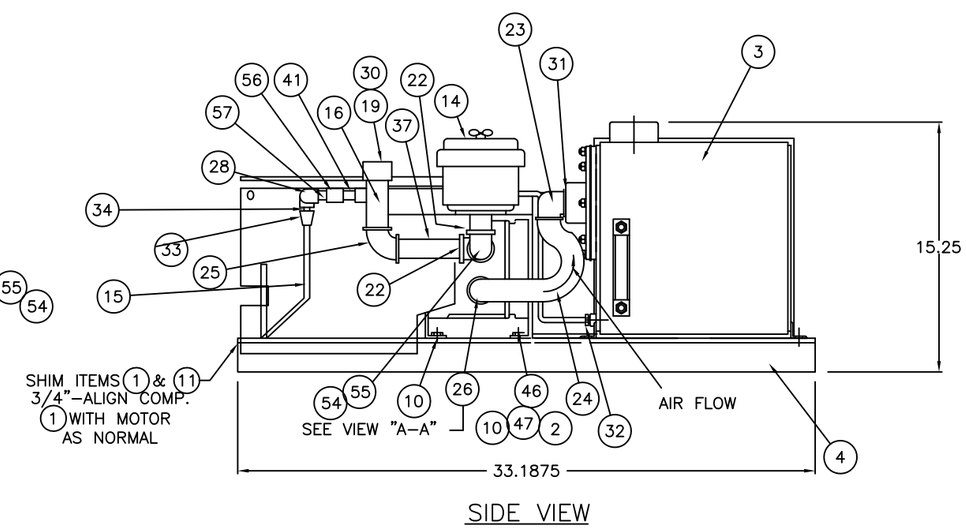

ITEM	REQ.	PART NO.	DESCRIPTION
1	1	505-00108-000	PUMP, AIR ASSEMBLY, 2-3/4
2	4	952-00106-000	WASHER, FLAT - 3/8"
3	1	538-00130-000	AIR & OIL TANK ASSY
4	1	003-01566-000	BASE COMPRESSOR
5	1	035-00214-000	BELT GUARD
6	2	809-00042-000	V-BELT, A-33, 34.3" PITCH LENGTH
7	1	847-00152-000	BUSHING, 3/4" x 1/2"
8	4	056-00277-000	PIN CYLINDER
9	1	921-00226-000	SHEAVE, 1" BORE, 5.75" OD, 5.0 P.D.
10	2	008-01869-000	BRACKET, COMPRESSOR
11	1	023-00124-000	CYLINDER-FINNED TUBING
12	1	813-00146-000	FAN
13	1	507-03260-000	TUBING ASSEMBLY TANK TO FIN TUBING
14	1	923-00079-000	FILTER AIR
15	1	507-05637-000	TUBING ASSEMBLY TO COMPRESSOR
16	1	157-01217-000	PIPE-NEW OIL IN COMPRESSOR
17	1	008-01874-000	BRACKET-HEAT EXCHANGER
18	1	072-00048-000	SCREEN FINNED TUBING
19	1	171-00114-000	FILTER BASKET OIL TO COMPRESSOR
20	1	940-03656-000	VALVE,SWING CHECK, 1/2" NPT
21	1	813-00124-000	FAN BUSHING, 3/4"
22	1	859-00025-000	TEE, 3/4"
23	1	859-00106-000	ELBOW STREET 1/2"
24	1	861-00345-000	HOSE, FLEXIBLE, 1/2" W/FITTINGS
25	1	847-01628-000	ELBOW,REDUCING,1-1/2" X 3/4"
26	1	861-00347-000	ADAPTER
27	1	845-00426-000	UNION, ELBOW 3/8" ODC
28	2	859-00078-000	ELBOW 1/4" NPT
29	1	845-00073-000	UNION, 3/8" ODC
30	1	919-00194-000	CAP, 1-1/2" CA-PLUG #CD-24
31	1	847-00436-000	BUSHING,1-1/2 X 1/2"
32	1	845-00046-000	CONNECTOR MALE 3/8" ODC X 3/8"NPT
33	1	845-00177-000	CONNECTOR MALE 3/8" ODC X 1/4"NPT
34	1	845-00043-000	NUT 3/8"
35	1	858-00089-000	PIPE PLUG 1/4"
36	1	857-00151-000	NIPPLE , 1/2" x 1-1/8" LG.
37	1	857-00166-000	NIPPLE, 3/4" x 2" LG
38	1	841-00522-000	KEY, 1/4" X 1-1/4" LG
39	1	841-00060-000	KEY, 3/16" X 7/8" LG
40	1	857-00174-000	NIPPLE, 3/4" x 6" LG.
41	1	857-00881-000	NIPPLE, 1/4" X 1-1/2" LG
42	2	868-00057-000	CAPSCREW,HEX HD.,1/2"-13 X 1" LG
43	2	869-00015-000	NUT, HEX, 1/2"-13
44	2	952-00094-000	LOCKWASHER, 1/2"
45	4	868-00063-000	CAPSCREW,HEX HD.,3/8"-16 X 2" LG
46	6	868-00056-000	CAPSCREW,HEX HD.,3/8"-16 X 1" LG
47	10	952-00093-000	LOCKWASHER, 3/8"
48	1	090-00941-000	TUBING FOR HEAT EXCHANGER
49	2	869-00030-000	NUT, HEX, 3/8" - 16
50	6	868-00137-000	CAPSCREW, HEX HD. 1/4" x 1"LG.
51	2	952-00145-000	WASHER FLAT - 1/4"
52	4	952-00092-000	LOCKWASHER- 1/4"
53	1	825-00104-000	GAS COCK, 3/4"
54	1	857-00163-000	NIPPLE, 3/4" x CL.
55	1	859-00081-000	ELBOW, 3/4"
56	1	277-00172-000	ORIFICE, A=1/8" (DWG.277A131)
57	1	857-00672-000	NIPPLE, 1/4" X 7/8" LG
58	2	015-00054-000	MOTOR CLAMP

REVISIONS
EN# 38097-NN
DATE

Return to Table of Contents

USED FOR MODELS
CB, CBW, CBLE, CBR 60" & 78" DIA., 50 HZ
4WI 60" & 78" DIA., 50 HZ

505 00140

ALL MATERIAL SIZES ON BILL OF MATERIAL ARE FOR REFERENCE ONLY. DRAWING DIMENSIONS MUST BE FOLLOWED.
TOLERANCE, UNLESS OTHERWISE SPECIFIED:
FRACTIONAL ± DECIMAL ±
HOLE LOCATIONS ± ANGLES ±
DRILLED, PUNCHED OR SLOTTED HOLES ± .010

SHT 01 OF 01

SCALE N.T.S.
DATE 10/10/00
DRAWN ~RAK~
SIZE B

CleaverBrooks®

COMPRESSOR ASS'Y, 2-3/4"
BELT DRIVEN 60"-78"DIA.

DRWG. NO. 505-00140-000AFT 03

ITEM	QTY	Part No.	Description
1	4	869-00165-000	NUT, OHIO, 3/8-16 UNC-2B
2	1	505-00098-000	PUMP, AIR ASSY, 4-3/4" x 5"
3	1	538-00130-000	AIR AND OIL TANK ASSY
4	2	868-00057-000	CAP SCREW, HE. HD., 1/2"-13 x 1" LG. A307
5	2	869-00015-000	NUT, HEX HD. 1/2-13 UNC ASTM A563 GR. A
6	13	952-00093-000	LOCKWASHER, MEDIUM 3/8" STEEL PLAIN
7	2	869-00030-000	NUT, HEX, 3/8-16 UNC A307 GR. A
8	7	868-00056-000	CAPSCREW, 3/8-16 UNC X 1" LG. A307 GR. A STEEL
9	2	008-01869-000	BRACKET COMPRESSOR
10	1	SEE TABLE	BASE, AIR COMP, 50 HZ
11	1	921-00125-000	SHEAVE, V-BELT,V 4.75" OD, 1" BORE
12	1	035-00214-000	BELT GUARD
13	6	868-00137-000	CAPSCREW, HEX HD. 1/4"-20 UNC-2A X 1" LG.
14	4	952-00092-000	LOCKWASHER, 1/4"
15	2	809-00014-000	V-BEL, A-31
16	1	857-01029-000	NIPPLE, PIPE, SMLS, 1-1/4" NPS x 8", SCH.80
17	1	825-00366-000	GAS COCK TEE HANDLE, 1-1/4" NPT
18	1	857-00709-000	NIPPLE, PIPE, SMLS, 1-1/4" NPS x CLOSE, SCH.80
19	1	859-00026-000	Tee, 1 1/4" NPT, 150# M.I.
20	1	859-00109-000	ELBOW, STREET, 1-1/4" NPT, 90°, 150# M.I.
21	1	843-00082-000	AIR FILTER, 1-1/4"NPT
22	1	857-00754-000	NIPPLE, PIPE, SMLS, 1-1/4" NPS x 2-1/2", SCH.80
23	1	847-00557-000	Elbow, Reducing, 1.5" NPT. x 1.25" NPT. 150# M.I.
24	1	157-01217-000	FITTING ASSEMBLY, PIPE
25	1	171-00114-000	FILTER BASKET, OIL TO COMPRESSOR
26	1	919-00194-000	PLUG, THREAD PROTECTIVE, 1-1/2" NPT
27	2	857-00729-000	NIPPLE, PIPE, SMLS, 1/4" NPS x 3-1/2" LG., SCH.80
28	1	859-00078-000	ELBOW, FEMALE, 90 DEG. 1/4" NPT. 150#M.I.
29	1	277-00172-000	ORIFICE
30	1	845-00202-000	EBLBOW, 45 DEG FLR`D, 3/8" ODC x 1/4" NPT
31	1	859-00108-000	ELBOW, STREET, 1" NPT 150# M.I. ANSI B16.3
32	1	861-00348-000	ADAPTER, 1" MPT x 1-15/16"-12 MALE THD
33	1	857-00673-000	NIPPLE, PIPE, SMLS, 1" NPS x 1.5" LG. (CLOSE), SCH.80
34	1	940-02729-000	VALVE, SWING CHECK, 1" 125#
35	1	861-00346-000	HOSE, FLEX., 7/8"ID W/ FITTINGS
36	1	858-00089-000	PIPE PLUG, SQ. HD., 1/4" NPT, 300#
37	1	847-00475-000	BUSHING, HEX. HD. 1-1/2" X 1" NPT F.S. ANSI B16.11
38	1	813-00124-000	FAN BUSHING,MAUREY #FH 3/4"
39	1	841-00060-000	KEY, 3/16" SQ. x 7/8" LG.
40	1	813-00146-000	FAN, BROOKSIDE #SWL-042

ITEM	QTY	Part No.	Description
41	1	023-00124-000	CYLINDER FINNED, TUBING
42	4	056-00277-000	PIN - CYLINDER
43	1	072-00048-000	SCREEN (FINNED TUBES)
44	1	090-00941-000	COMPRESSOR TUBING ASSY
45	2	015-00054-000	CLAMP, COMPRESSOR, 5 HP
46	4	868-00063-000	CAPSCREW, HEX HD. 3/8-16 UNC X 2" LG. A307 GR. A
47	4	952-00106-000	WASHER, FLAT, 3/8" PLAIN STEEL
48	1	008-01874-000	BRACKET
49	1	841-00522-000	KEY, 1/4" SQ. x 1-1/4" LG.
50	2	952-00145-000	WASHER, FLAT, 1/4"
51	1	845-00426-000	UNION ELBOW, 45 DEG. FLARED, 3/8"
52	1	845-00073-000	FITTING, UNION, 3/8" ODC
53	1	507-05637-000	TUBING, COMPRESSOR ASSY
54	1	845-00043-000	NUT, SHORT, SAE 45DEG FLRD BRASS 3/8"ODT.
55	1	507-03260-000	TUBING ASSY, TANK TO FINNED TUBE
56	1	845-00046-000	Male Connector, 3/8" Odt X 3/8" Mpt

ASSY NO.	P/N #10	MOTOR HP
505-00121-000	003-00781-000	7-1/2 (213T)
505-00141-000	003-02067-000	5
505-00143-000	003-02153-000	7-1/2 (215T)

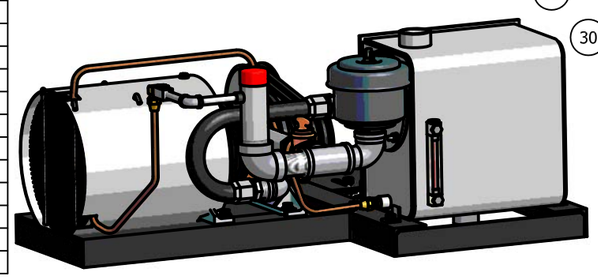

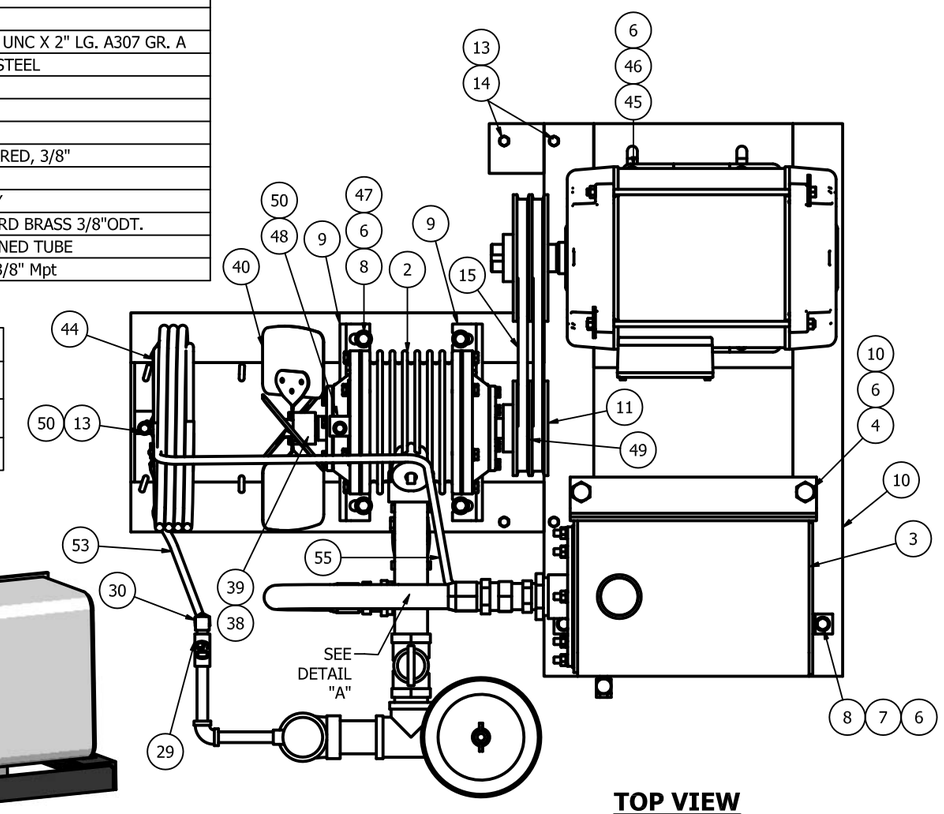

TOP VIEW
SHOWN W/O #12, #41 & #42

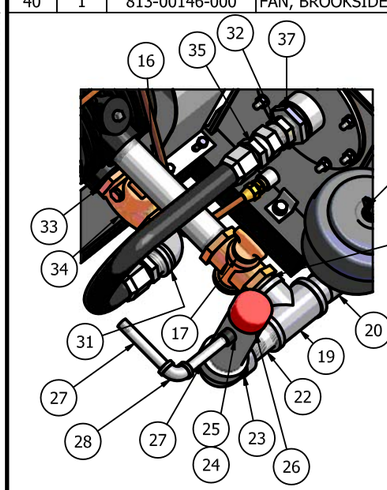

DETAIL A

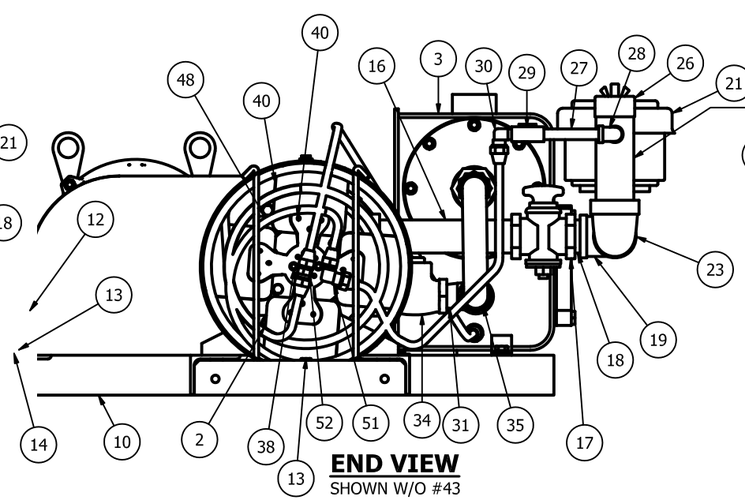

END VIEW
SHOWN W/O #43

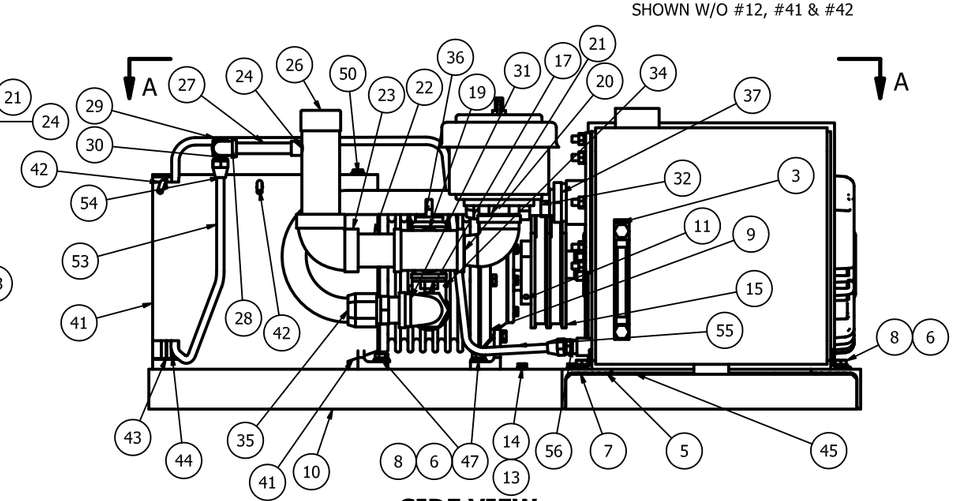

SIDE VIEW

REVISIONS
EN# 40124-SS
DATE

Return to Table of Contents

USED FOR MODELS
CB, CBW, CBLE, & CBR 83" & 96" DIA., 50 HZ
4WI 96"-106" DIA., 50 HZ

ALL MATERIAL SIZES ON BILL OF MATERIAL ARE FOR REFERENCE ONLY. DRAWING DIMENSIONS MUST BE FOLLOWED.
TOLERANCE, UNLESS OTHERWISE SPECIFIED:
FRACTIONAL ± DECIMAL ±
HOLE LOCATIONS ± ANGLES ±
DRILLED, PUNCHED OR SLOTTED HOLES ±

SIZE C | SHT 1 OF 1

DRAWN BY: dhicks
CHECKED BY:
DATE: 3/1/2010
SCALE: N.T.S.

CleaverBrooks®
AIRCOMPRESSOR - 5"
BELT DRIVE, 96" BOILERS
DRWG. NO. 505-00121-000AFT REV 18