M5178 1647EN
20 December 2016

oilon®

Operation and maintenance manual
GKP-350 M - 450 M WD100, WD200, FGR

Read these instructions carefully before installation, use, or maintenance

Original instructions

Contents

1 Introduction

2 Technical data

3 Installation

4 Commissioning

5 Operation

6 Maintenance

1 Introduction

1.1 Liability disclaimer

Burner, with the delivered ancillary equipment, is always a part of a larger system. This manual does not include comprehensive instructions for planning, installing and operating a complete system. Thus, the designer, installer and operator of the equipment should have sufficient qualifications and knowledge to design, install, and operate the parts of the system, as well as the system as a whole. The system, including burner control system, must be designed and constructed according to local regulations and requirements.

The following information must be read and understood by the users of the appliance. The users must be trained and fully qualified according to local legislation for the specific work. The users of the appliances must also be capable to recognize possible hazards in the system and in the environment where the appliance is used.

This manual contains information and instructions based on product standards and regulations, and on our best knowledge. Failure to follow these instructions can lead to damage to the appliance. Erroneous use of the appliance or the failure to follow any instructions or warnings in the manual or this disclaimer can lead to property damage, personal injury or death.

Oilon is unable to accept any liability for damage in case of:

- failure to follow these instructions
- other use than what is explained in this manual
- use by unqualified personnel
- the use of spare parts not provided by Oilon.

Your legal rights are governed by a Limited warranty, the terms of which are incorporated herein by reference. Any modification at the product, if not approved by Oilon, is disclaimed and may void your rights under the Limited warranty.

1.2 Safety precautions

Read these instructions carefully before installation, commissioning, operation or maintenance of the device. The given instructions must be followed. Throughout this manual, the following three symbols are used to point out very important information:

DANGER !	Be careful. The DANGER symbol indicates a possible danger of bodily harm or lethal injury.

CAUTION	Pay attention. The CAUTION sign indicates a possible danger of damage to the device, components or surroundings.

! Note	Note indicates tips, hints, and other essential information.

Keep these instructions as well as the electrical diagrams available near the device.

Oilon products are manufactured according to general product standards and directives, and based on our best knowledge about product design, and technologies. Operation safety is one of the leading principles in our product development. However, it is wise to be prepared, and think about safety. Read the following principal safety warnings and instructions:

DANGER!	Installation, commissioning, or service of the appliance is to be carried out by authorized and trained personnel only, adhering to all local regulations and requirements.

The equipment shall be installed in accordance with the Provincial Installation Requirements, or in their absence, the CGA B149.1 and B149.2 Installation Codes shall prevail.

DANGER!	IN CASE OF FIRE OR OTHER EMERGENCY • Cut off power supply. • Close main fuel shut-off valve. • Take appropriate actions. • Contact operation controller.

DANGER!	IN CASE OF A GAS LEAKAGE • Do not light fire or touch electric equipment. • Close main fuel shut-off valve. • Make sure there are no people in the leakage area. • Make sure the leakage area is properly ventilated. • Contact operation controller.

DANGER!	Cut off power supply to burner and close manual shut-off valves always before any maintenance work. Cutting power is adequate when just inspecting the device.

DANGER!	Connectors in control box are under voltage. Only authorized users may open safety cover.

DANGER!	Fasten all safety covers, enclosures, and guards with all screws before start-up. Use appropriate tools.

DANGER!	Wear proper hearing protection and personal protective equipment, such as protection shoes and gloves when necessary.

CAUTION	Do not use Teflon tape in piping.

DANGER !	If burner start-up fails consecutively two times, do not restart burner before carefully investigating the reason for the failure.

DANGER !	Do not touch hot pipes or surfaces during operation or maintenance.

Emergency shutdown

In an emergency, cut off power supply to the burner. Close the manual shut-off valves. After safety check you can restart the burner. Check settings, and monitor that operation continues as normal.

Take care of the boiler room

DANGER !	Never use open fire while checking burner or boiler. Do not store any inflammable materials in boiler room.

DANGER !	Keep boiler door closed while starting burner, and during burner operation.

- Maintain tidiness in boiler room, and keep boiler room door closed.
- Make sure that there is always enough water and pressure in heating system.
- Make sure boiler and chimney are swept regularly.
- Check flue damper adjustment and gate valve regularly.
- Make sure burner room air-inlet gap is open.
- Make sure shut-off valves on pressure gauges are shut.
- Make sure pipeworks tightness, boiler system safety appliances, pipeworks, and burner are checked regularly according to the rules and regulations of public authorities.
- Check boiler and its components.

We recommend a maintenance contract.

WARNING

IF YOU SMELL GAS, OPEN WINDOW, EXTINGUISH ANY OPEN FLAMES, STAY AWAY FROM ELECTRICAL SWITCHES, EVACUATE THE BUILDING AND IMMEDIATELY CALL THE GAS COMPANY.

IN ACCORDANCE WITH OSHA STANDARDS, ALL EQUIPMENT, MACHINES AND PROCESSES SHALL BE LOCKED OUT PRIOR TO SERVICING.

IF THIS EQUIPMENT IS NOT INSTALLED, OPERATED AND MAINTAINED IN ACCORDANCE WITH THE MANUFACTURERS INSTRUCTIONS, THIS PRODUCT COULD EXPOSE YOU TO SUBSTANCES IN FUEL OR FROM FUEL COMBUSTION WHICH CAN CAUSE DEATH OR SERIOUS ILLNESS AND WHICH ARE KNOWN TO CAUSE CANCER, BIRTH DEFECTS OR OTHER REPRODUCTIVE HARM.

IMPROPER SERVICING OF THIS EQUIPMENT MAY CREATE A POTENTIAL HAZARD TO EQUIPMENT AND OPERATORS.

SERVICING MUST BE DONE BY A FULLY TRAINED AND QUALIFIED PERSONNEL.

WARNING

DO NOT ATTEMPT TO START, ADJUST OR MAINTAIN THIS BURNER WITHOUT PROPER TRAINING OR EXPERIENCE. FAILURE TO USE KNOWLEDGEABLE TECHNICIANS CAN RESULT IN EQUIPMENT DAMAGE, PERSONAL INJURY OR DEATH.

1.3 Product overview

Intended use

This is an automatic forced draught burner. The burner can be used on most heating appliances; for warm and hot water boilers, hot air generators, and various types of process heating. They are also designed to suit furnaces with high back pressure.

The burners can be mounted in horizontal, vertical and upward facing, or vertical and downward facing orientation. Our burners are designed for operation in covered areas, within the temperature range of 0 °C – +50 °C / + 32 °F – 105 °F. The standard setup is designed to operate in the altitude of max. 500 m / 1,640 ft above sea level.

See **Technical data** for the information on standard applicable fuels. Burners using other fuels are available upon request.

Construction

The surface of the housing is finished with durable high-gloss paint. Electrical installations and burner service are easy to perform because the top cover is removable. The stainless steel alloy combustion head and the diffuser disc can withstand high temperatures.

The motor output components of the fan motor (short-circuit protection, thermal protection, contactor) must be designed according to the site. The motor output components are located in the customer's system, and they are described in the electrical diagram.

The burner control system handles all burner operation sequences automatically. In the event of a burner failure, the unit stops the burner automatically.

Each burner is tested separately before delivery to the customer.

For more information on products, visit our web site at www.oilon.com: **Oilon –> Industries –> Product material**.

Information on components can be found under the headline **Burner parts**.

Type labelling

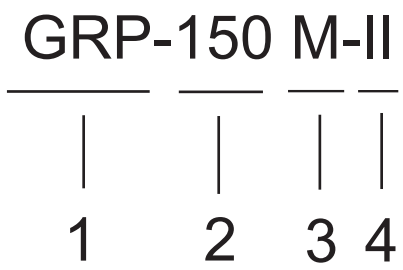

POLTINKOODI ver. 2

Label element 1: Fuel

KP	Light fuel oil
RP	Heavy fuel oil
GP	Gas
GGP	Dual gas
GKP	Gas, light fuel oil
GRP	Gas, heavy fuel oil

Label element 2: Burner size categorization

Label element 3: Method of control

H	Two-stage
M	Modulating
MH	Modulating gas, two-stage oil
ME	Modulating with a separate fan

Label element 4: Additional code, for example burner capacity I-III or automation, like WD34

Type plate

The following illustration shows an example of the type plate of Oilon burners:

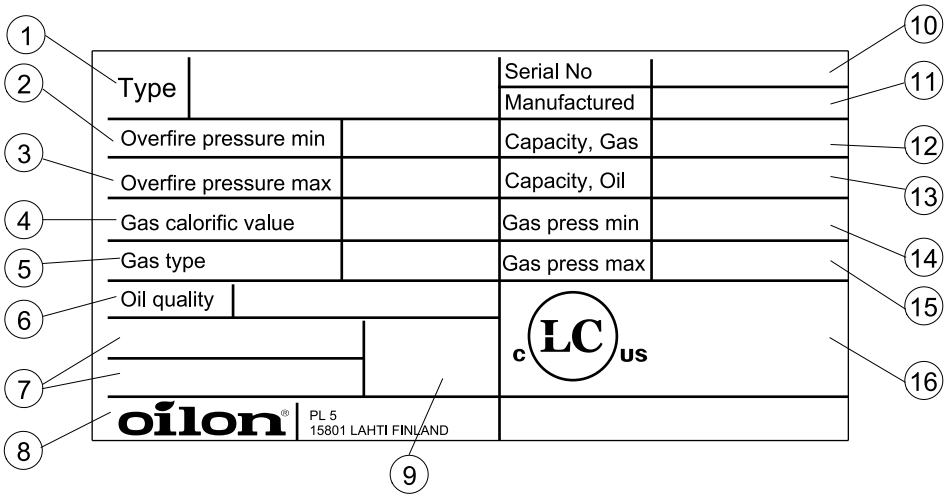

Type plate US ver. 1

Pos.	Description	Pos.	Description
1	Burner type: KP = Light fuel oil RP = Heavy fuel oil GP = Gas GKP = Light fuel oil and gas GRP = Heavy fuel oil and gas	9	Degree of protection
2	Overfire pressure min, IN.WC	10	Serial number
3	Overfire pressure max, IN.WC	11	Month and year of manufacture
4	Gas calorific value, BTU/scf	12	Capacity, gas, MBTU/hr
5	Gas type	13	Capacity, light fuel oil, GPH
6	Oil quality / viscosity	14	Gas pressure min, IN.WC
7	Supply voltage, input power and current, V / Hz / A / kW	15	Gas pressure max, IN.WC
8	Manufacturer address	16	L LC US marking and certification institute code

1.4 Flue gas recirculation (optional)

The flue gas recirculation (FGR) reduces the NOx content of flue gases. A certain proportion of flue gas is led back to the combustion chamber, which causes the flame temperature to drop. This influences the NOx content of flue gas.

In general, the amount of recirculated flue gas must be adjusted to the smallest possible quantity needed to obtain the required NOx rate. The flue gas quantity is adjusted with the throttle valve located on the FGR pipe.

If the quantity of recirculated flue gas is excessive the flame may become instable and the CO rate may increase. The amount of flue gas to circulate is set on the control panel. To optimize the result, burner is adjusted to operate according to preset FGR-curves.

For detailed information and instructions, see the chapters *Installation* and *Commissioning*.

1.5 Handling and storing

Storing and recycling

Store device and its equipment in a dry and airy place. Protect device from dust and humidity. Follow storing and transporting instructions included in the package.

Documentation is part of the product, and it must be passed on together with device, also with a second hand product. Pass on documents delivered with device to owner at installation, and advise to keep them properly. Make sure that operating instructions are available near the device.

Recycle product package. The metal and plastic parts of the device are made of recyclable materials. Also all electrical components are recyclable, and should be handled according to local regulations.

2 Technical data

2.1 Burner technical data

Burner data

Burner	GKP-450 M
Capacity gas, MMBtu/h	2.90 - 18.77
Capacity oil, MMBtu/h	7.51 - 18.77
Capacity oil, lb/h	408 - 1014
Max. turndown ratio, gas	1:6 (100–16.6%)
Max. turndown ratio, oil	1:2.5 (100–40%)
Nominal oil pump motor output, hp	10
Motor current A	19.4
Motor speed r/min	2940
Oil inlet pressure to pump PSI	14.5 - 72.5
Oil operating pressure (atomizing pressure), PSI	290 - 300
Oil regulator return flow pressure, ignition position PSI	72 - 102
Oil regulator return flow pressure, partial load PSI	102 - 131
Input power hp	17
NO_x-class	Natural gas (2nd family): 1 Light fuel oil: 1
Weight kg	1113

Other technical data and requirements

Fuel, gas use	Natural gas Make sure the used gas is clean and non-condensed. When using other gases than natural gas, the composition of the gas must be known. Consult burner manufacturer on the suitability of the burner for special gases.
Gas inlet pressure to burner max.	10 PSI
Max. demand of combustion air, gas use	13.5 cfh/MBtu

CAUTION

DO NOT USE GASOLINE, CRANKCASE OIL, OR ANY OIL CONTAINING GASOLINE.

Fuel, oil use	# 2 fuel oil
Efficiency, # 2 fuel oil	2.20 lb ≈ 40.46 MBtu efficiency, when heat value is 1146.03 Btu/ft³
Max. demand for combustion air, oil use	529.72 cfh/lb

Control voltage	120 V (-15%...+10%) 50 Hz / 60 Hz 1-phase
Motor voltage	460 V 60 Hz 3-phase

Ambient temperature range	0...+ 105 °F
Degree of protection	NEMA 3

Working diagram

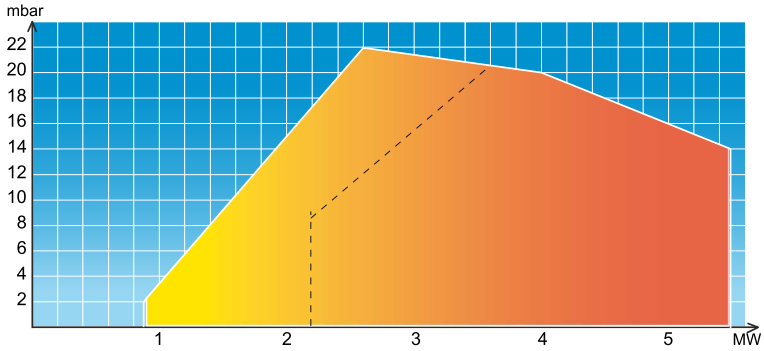

Working diagram ver. 3

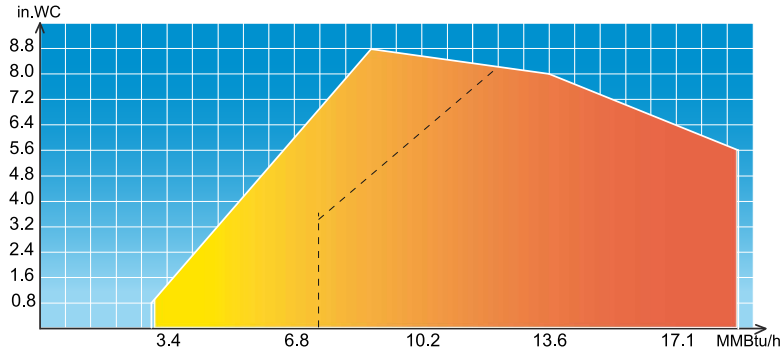

Working diagram ver. 1

dashed line = oil
solid line = gas

2.2 Profibus module technical data

Profibus module	PBM100
Power supply	24 VDC
Power consumption	100 mA
Electromagnetic compatibility EMC	2014/30/EC
Permissible ambient temperature	-20...+60°C -4...+140°F
Lengths of cables	
Supply 24 VDC	< 10 m < 33 ft
LSB (screened)	max. 100 m max. 328 ft
PROFIBUS (screened)	100 m 328 ft

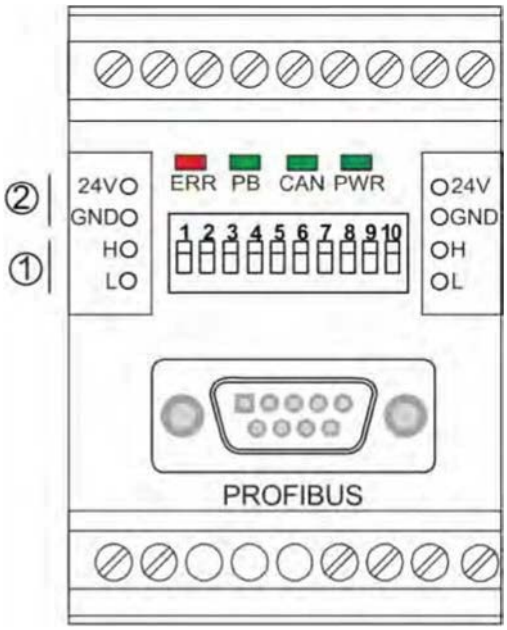

Profibus diagram ver. 1

! Note	Terminals may not be connected!

1 CAN/LSB
2 DC power supply (safety extra low voltage)

2.3 Flame detector technical data

QRI	
Supply voltage, operation	14 VDC ±5 %
Supply voltage, testing	21 VDC ±5 %
Signal voltage	0…5 VDC
Power consumption	< 0,5 W
Connected detector cable max. length	1.8 m 5.9 ft
Auxiliary detector cable max. length	100 m 328 ft
Protection degree	NEMA 3
Permissible operation ambient temperature	-20...+60 °C -4...+140 °F

- integrated signal amplifier
- continuous or interrupted use
- mains frequency filtering
- does not detect ignition spark
- spectral sensitivity range ~1…3 µm
- QRI2A2.B180B frontal illumination
- QRI2B2.B180B lateral illumination.

QRI connection

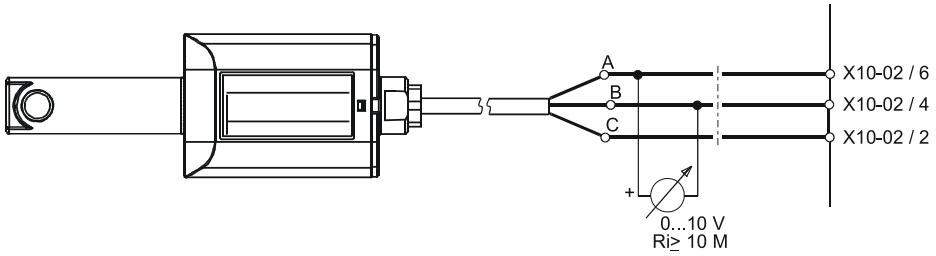

QRI connection ver. 1

A	Black	X10-02 / 6	Signal line
B	Blue	X10-02 / 4	Reference line
C	Brown	X10-02 / 2	Power line

2.4 Burner control technical data

Burner control	LMV5...
Mains voltage	120 VAC –15/+10 %
Locking during undervoltage conditions	< 96 VAC
Transformer / primary side	120 VAC
Transformer / side 1	12 VAC
Transformer / side 2	2 x 12 VAC
Mains frequency	50–60 Hz 6 %
Power consumption	< 30 W
Permissible input current / differential air pressure switch	0.5 A / 230 VAC -15/+10 %
Permissible input current / status input	1.5 mA/120 VAC -15/+10 %
Perm. current rating of control terminals • fan motor contactor • burner failure • ignition transformer • gas valves • oil valves	5 A / 120 VAC -15/+10 % • 1 A/120 VAC -15/+10 % • 1 A/120 VAC -15/+10 % • 1.6 A/120 VAC -15/+10 % • 1.6 A/120 VAC -15/+10 % • 1.6 A/120 VAC -15/+10 %
Permissible operation ambient temperature	-20...+60 °C -4...+140 °F

Block diagram of contact links

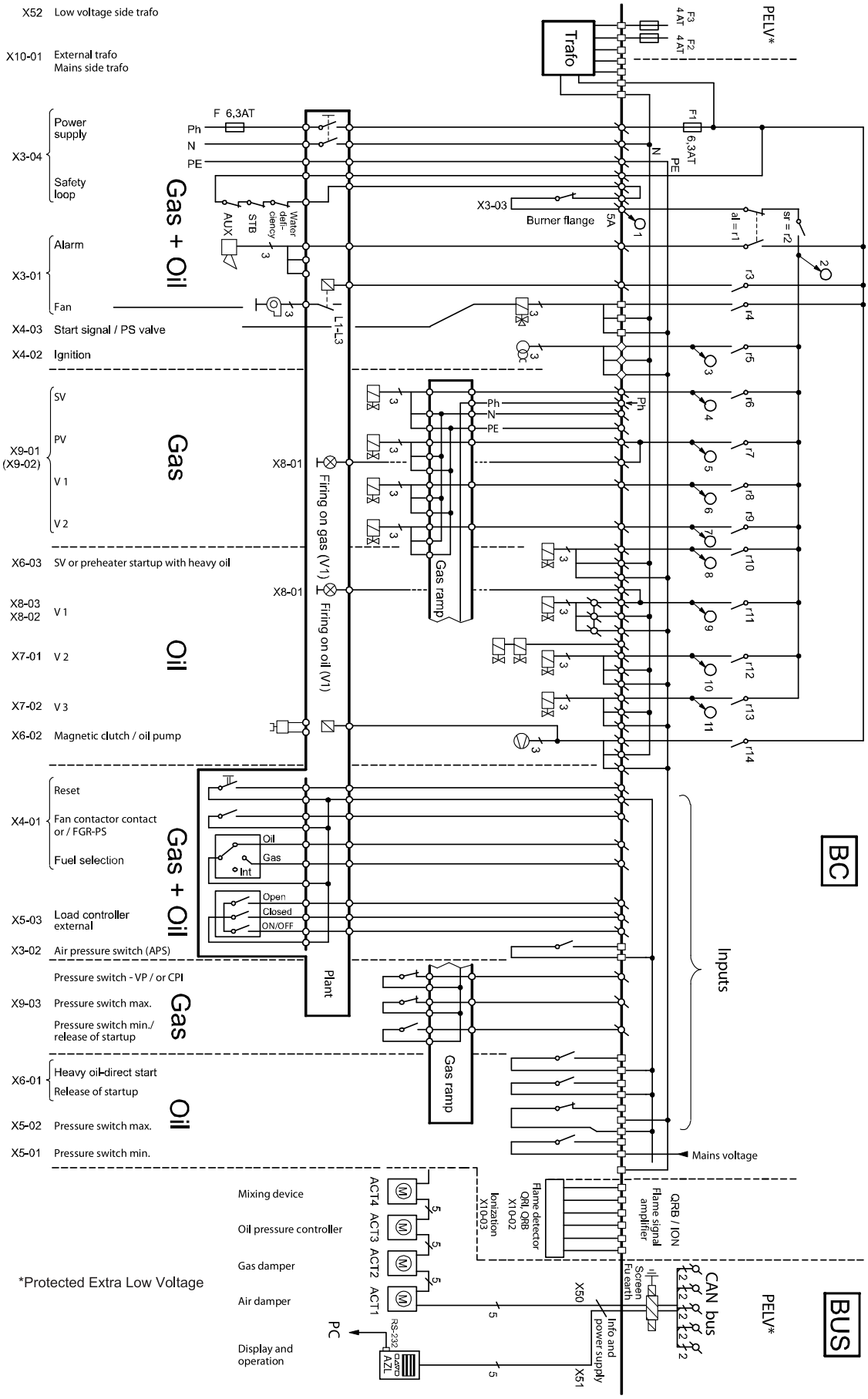

Block diagram ver. 5

Inputs / outputs (VSD)

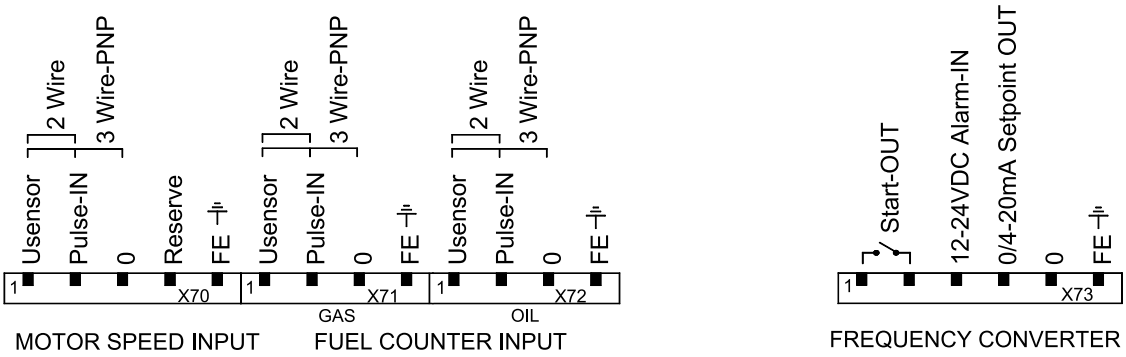

Connection diagram ver. 3

2.5 Servomotor technical data

Servomotor	SQM45...	SQM48.497	SQM48.697
Mains voltage	2 x 12 VAC	2 x 12 VAC	2 x 12 VAC
Power consumption	9 – 15 VA	26 – 34 VA	26 – 34 VA
Angular adjustment	90°	90°	90°
Accuracy	±0.2°	±0.2°	±0.2°
Torques, operation / holding	3 / 1.5 Nm 26.55 / 13.27 lbf·in	20 / 20 Nm 177 / 177 lbf·in	35 / 35 Nm 310 / 310 lbf·in
Running time	10 s	30 s	60 s
Degree of protection	NEMA 3	NEMA 3	NEMA 3
Permissible ambient temperature	-20...+60 °C -4...+140 °F	-20...+60 °C -4...+140 °F	-20...+60 °C -4...+140 °F

2.6 Display and operating unit technical data

Display and operating unit	AZL...
Mains voltage	24 VAC –15/+10 %
Power consumption	< 5 W
Protection degree	NEMA 3
Battery	3 V Lithium
Battery, Varta	CR 2430
Battery, Duracell	DL 2430
Permissible operation ambient temperature	-20...+60 °C -4...+140 °F

CAUTION

Protect the equipment from condensation, ice and water ingress.

2.7 O_2 module technical data (WD200)

O_2 module	PLL52...
Mains voltage, sensor heating	110 VAC –15/+10 %
Mains voltage	2 x 12 VAC
Power consumption	4 VA
Analog inlet, oxygen sensor	QGO20.000D27
Analog inlet, combustion temperature	Pt1000 / LG-Ni 1000
Analog inlet, flue gas temperature	Pt1000 / LG-Ni 1000
Analog inlet, bus interface	CAN
Protection degree	NEMA 3
Permissible ambient temperature	-20...+60 °C -4..+140 °F

CAUTION

Protect the equipment from condensation, ice and water ingress.

2.8 Oxygen sensor technical data (WD200)

Oxygen sensor	QGO20...
Measuring cell	ceramic zirconium dioxide cell
Mains voltage, measuring cell heating	110 VAC –15/+10 %
Power consumption	max. 90 W, typically 35 W
Measuring cell temperature	700 °C ±50 °C 1292 °F ±122 °F
Measuring range	0.2…20.9 % O2
Flue gas velocity	1…10 m/s 3.28...32.81 ft/s
Protection degree	NEMA 2
Max. temperature, flange	+250 °C +482 °F
Max. temperature, connecting head	+70 °C +158 °F
Max. temperature, flue gas	+300 °C +572 °F

CAUTION

Protect the equipment from condensation, ice and water ingress.

3 Installation

3.1 Space requirements

Leave enough space on each side of the burner for installation, commissioning, and maintenance purposes. The minimum space requirements are presented in the following.

DANGER!	Installation, commissioning, or service of the appliance is to be carried out by authorized and trained personnel only, adhering to all local regulations and requirements.

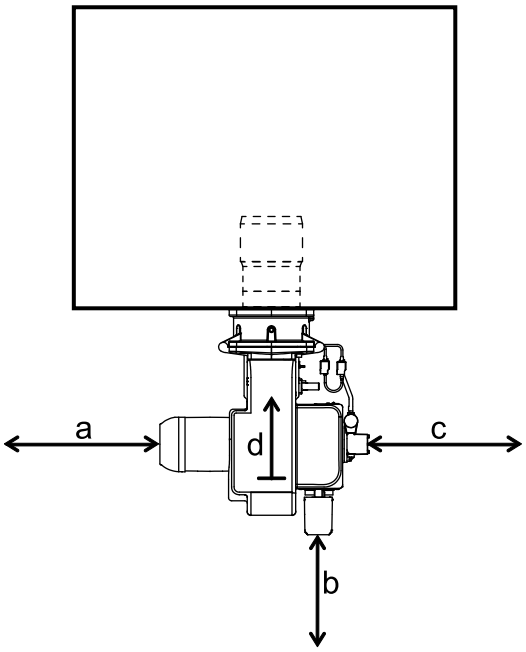

Space requirements ver. 1

Legend	Minimum dimension, cm	Minimum dimension, ft
a (left)	80	2.6
b (front)	80	2.6
c (right)	80	2.6
d (top)	100	3.3

It is recommended to leave more space around the burner. These are only the minimum requirements.

3.2 Removing protective covers and lifting the burner

DANGER!	• Lifting the device can only be performed by a qualified person, who knows the regulations and safety instructions for lifting. • Always use all lifting points of the lifting direction. • Do not go under a supported device.

! Note	If you set the burner on a pallet, always remove the oil filter.

The burners are attached and supported to a transportation base. The base can be lifted from all sides with a forklift. When lifting the package, the center of gravity must be in the middle between the forks to avoid falling.

Use hexagonal key to remove and attach protective covers.

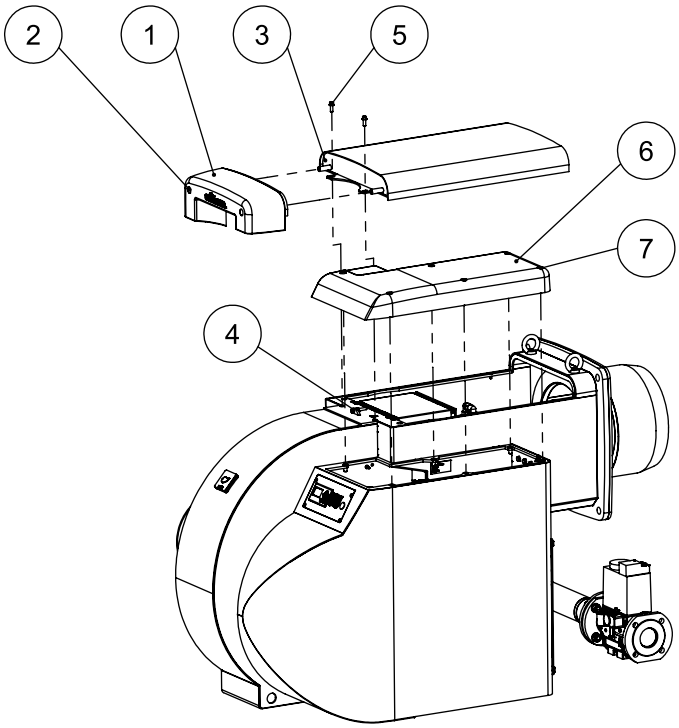

D042848 ver. 1

Pos.	Item
1	End cover
2	End cover, fastening screws, 2 pcs
3	Frame cover (15 kg / 33 lbs)
4	Frame cover, tightening screw, 1 pcs
5	Frame cover, fastening screws, 2 pcs
6	Electric casing protective cover
7	Electric casing protective cover, fastening screws, 6 pcs

To remove protective covers

1. Loosen the screws of the end cover and remove the cover.
2. Loosen the tightening screw of the frame cover, and also remove its fastening screws. Draw the cover about 20 mm (0.79 inch) towards yourself and remove it.
3. Loosen the screws of electric casing protective cover, and remove the cover.
4. Reassemble covers in reverse order.

To lift the burner

Remove end cover before placing the lifting straps. Use lifting straps or chains with hooks to lift the burner as shown in the illustration. Protect the burner from possible friction during lifting.

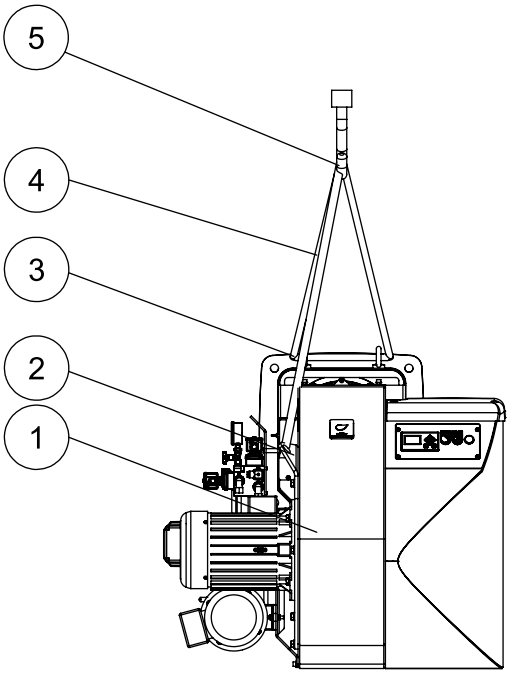

D046885 ver. 1

1 Burner
2 Lifting lug (1 pcs)
3 Lifting eyes (2 pcs)
4 Lifting straps
5 Lifting hook

3.3 Mounting burner

- Coat bolt threads with graphite-bearing grease before fitting.
- Fasten burner to boiler in accordance with the given dimensions.
- Install burner so that motor axle is on horizontal level. Do not install burner upside down.
- Install burner so that it can be turned fully open and combustion head can be detached.
- Remove transportation support after fastening.
- Protect the burner from weather conditions during installation and when installed.

CAUTION	Install burner firmly. Vibration may damage burner or its components.

Burner mounting dimensions (mm)

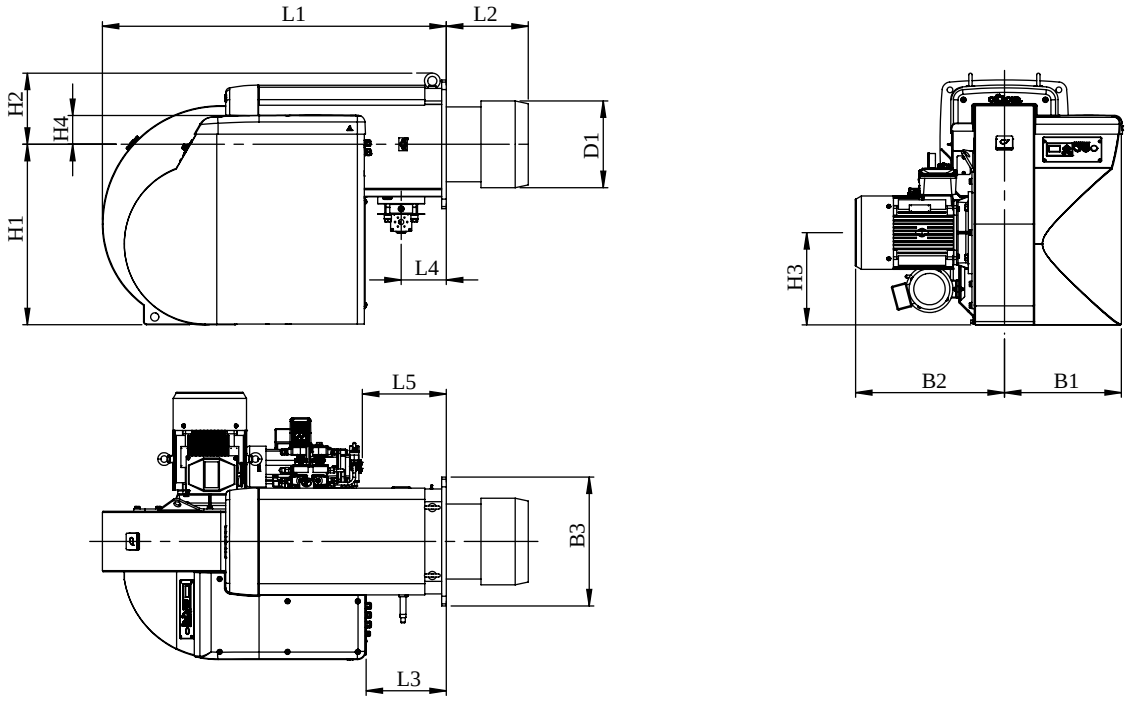

D042664 ver. 1

Burner	Dimensions in mm												
	L1	L2	L3	L4	L5	H1	H2	H3	H4	B1	B2	B3	D1
450 M	1470	350	342	193	335	770	304	395	125	500	650	550	370

Burner	Dimensions in inch												
	L1	L2	L3	L4	L5	H1	H2	H3	H4	B1	B2	B3	D1
450 M	57.87	13.78	13.46	7.60	13.19	30.31	11.97	15.55	4.92	19.69	25.59	21.65	14.57

Combustion head mounting dimensions

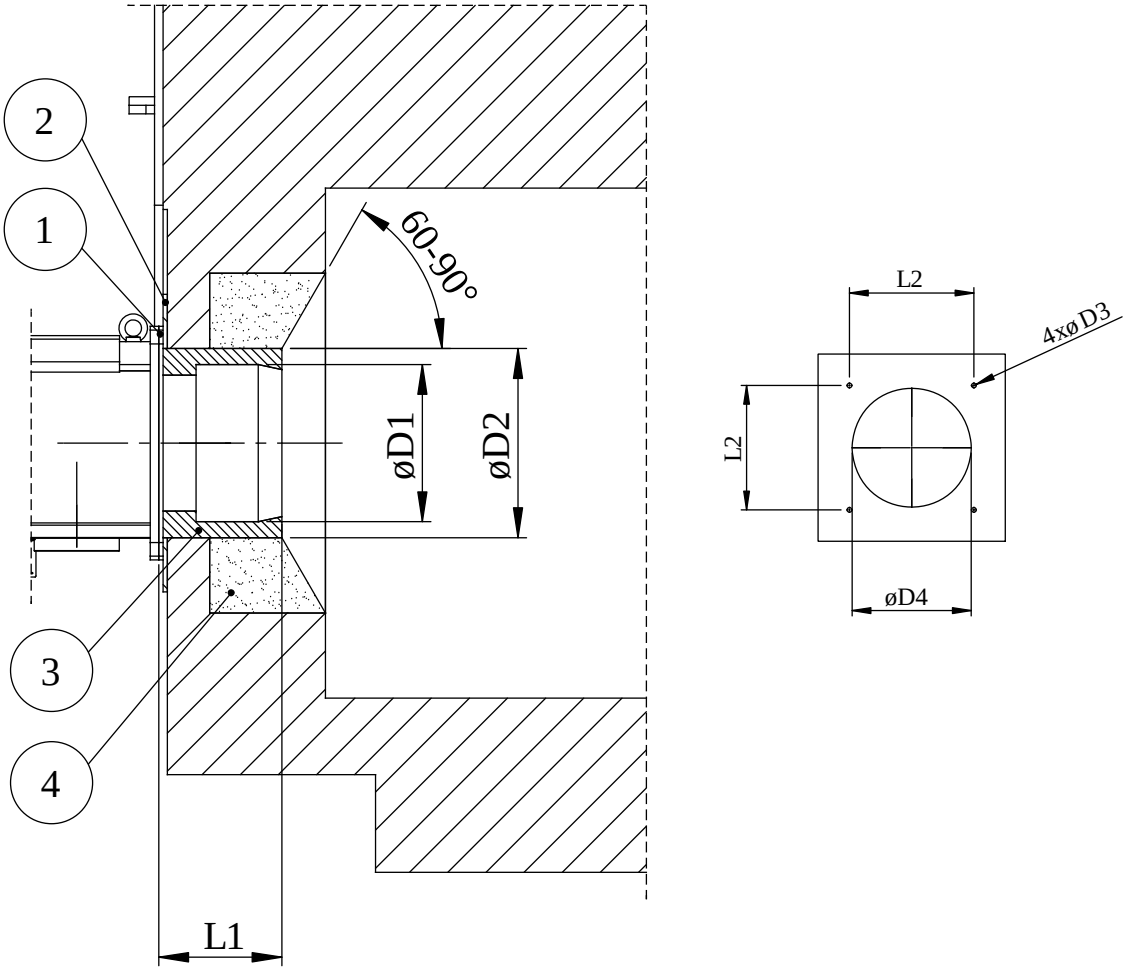

D042316 ver. 3

Pos.	Item	Pos.	Item
1	Gasket, 10 mm / 0.39 in	3	Ceramic wool or similar
2	Mounting plate, 20 mm / 0.39 in	4	Refractory

Burner	Dimensions in mm					Fastening screws
	D1	D2	D4	L1	L2	D3
450 M	370	440	440	350	465	M20

Burner	Dimensions in inches					Fastening screws
	D1	D2	D4	L1	L2	D3
450 M	14.57	17.32	17.32	13.78	18.31	M20

3.4 Gas valve selection table

BURNER	GAS VALVE		BURNER CAPACITY RANGE kW				
			GAS INLET PRESSURE				
	SIZE	TYPE	20 mbar	30 mbar	50 mbar	100 mbar	150 mbar
350 M	DN 50	DMV-D		1700	2200	3100	3800
	DN 65	DMV	2000	2500	3300	4400	4400
	DN 80	DMV	2800	3400	4400	4400	4400
	DN 100	DMV	3300	4100	4400	4400	4400
	DN 125	DMV	3800	4400	4400	4400	4400
450 M	DN 50	DMV-D			2200	3200	3900
	DN 65	DMV		2600	3300	4700	5500
	DN 80	DMV	3000	3700	4800	5500	5500
	DN 100	DMV	3800	4600	5500	5500	5500
	DN 125	DMV	4700	5500	5500	5500	5500

BURNER	GAS VALVE		BURNER CAPACITY RANGE MMBtu/h				
			GAS INLET PRESSURE				
	SIZE	TYPE	8 in.WC	12 in.WC	20 in.WC	40 in.WC	60 in.WC
350 M	DN 50	DMV-D		5.8	7.5	10.6	13.0
	DN 65	DMV	6.8	8.5	11.3	15.0	15.0
	DN 80	DMV	9.6	11.6	15.0	15.0	15.0
	DN 100	DMV	11.3	14.0	15.0	15.0	15.0
	DN 125	DMV	13.0	15.0	15.0	15.0	15.0
450 M	DN 50	DMV-D			7.5	10.9	13.3
	DN 65	DMV		8.9	11.3	16.0	18.8
	DN 80	DMV	10.2	12.6	16.4	18.8	18.8
	DN 100	DMV	13.0	15.7	18.8	18.8	18.8
	DN 125	DMV	16.0	18.8	18.8	18.8	18.8

! Note — If the gas inlet pressure is less than 30 mbar / 12 in.WC or if some other gas except natural gas is used, case-specific evaluation must be made.

! Note — The max. capacities shown in the table are achieved when the boiler back pressure is 0.

3.5 Installing burner to gas supply line

Supply line

If necessary, decrease the gas pressure with pressure regulating assembly. The gas supply line after the pressure regulator must be of the same size or one size larger than the burner's gas pressure regulating assembly. In installation, observe the valve manufacturer's instructions.

As standard, the gas connection to the burner is from the right side. The valves shown in the following example may vary from those delivered.

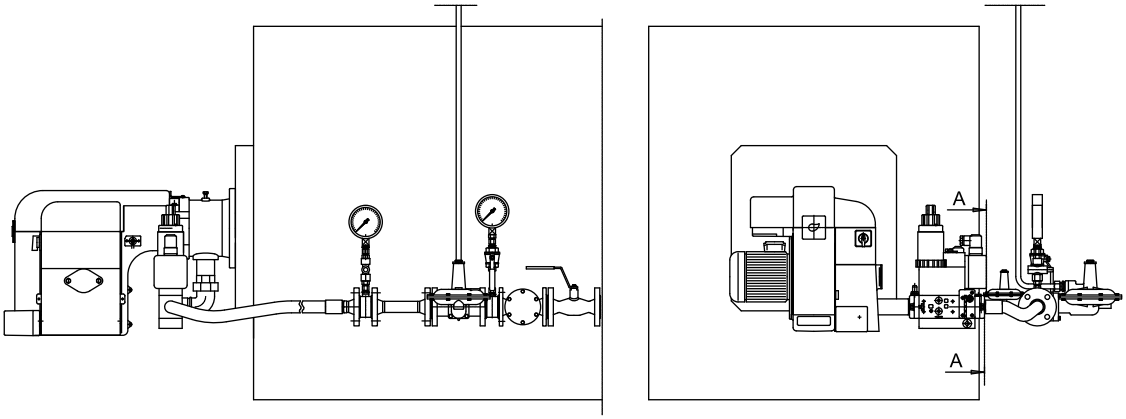

B352U ver. 3

CAUTION	• Install gas pipings according to the regulations of local public authority. • Check that there is a separate filter before gas equipment. • Prior to installing gas pressure regulator block to piping, use compressed air to blow supply piping clean. • Clean and check piping prior to the installation of gas pressure regulating assembly. • Install gas valve so that no mechanical stress is directed to it. • Vent gas piping before the first start-up.

To vent gas pipe:

1. Lead pipe to an open outdoor location either from the gas valve or from the blow-off valve fixed to the pipe.
2. Open the blow-off valve.
3. Open the ball valve slowly in main supply line and fill piping with gas.
4. Close the blow-off valve.

3.6 Installing gas pressure regulating assembly

Installing pressure regulator

Consider the following factors when selecting pressure regulator:

- gas supply pressure
- secondary pressure
- the quantity of gas to be combusted
- type of gas

If the gas inlet pressure is higher than the Pmax. value given in the burner technical data, reduce the gas inlet pressure in regulating assembly. Also, if the gas inlet pressure is not stable, stabilize the pressure with pressure regulator. If pressure regulator is not equipped with safety relief valve and safety shut-off valve, they must be installed according to the instructions given by the manufacturer. Also any impulse tubes must be installed according to the instructions given by the regulator manufacturer.

Installing safety relief valve and safety shut-off valve

Check that the safety relief valve is dimensioned so that the safety shut-off valve does not release if the burner shuts down at full load. The burner may be shut down, for example, due to mains interruption. Follow the local legislation when you set the safety relief valve to open at a higher pressure than the secondary pressure (pressure after the regulator).

Set the safety shut-off valve to closed position at an approx. 60 % higher pressure than the secondary pressure. Closing the pressure of the safety shut-off valve must not exceed the Pmax. pressure.

Prerequisites for manual shut-off valve

The gas pressure regulating assembly must be equipped with a manual shut-off valve (pos. 2 in the diagram below). The valve must fulfill the following requirements:

- The flow cross-sectional area must be at least of the same size as the nominal size of the gas pressure regulating assembly.
- The valve must be of such type that it can be closed quickly (for example, inversion 90°). It must also be easily accessible but protected from unintentional use.
- Pressure endurance of the valve must be at least 1.5 times the supply pressure, and it must be equipped with mechanical limiters in open and closed positions.
- The open and closed positions must be marked separately, if it is not evident from the valve structure.

The valve is not necessarily included in the burner delivery.

Example of gas pressure regulating assembly

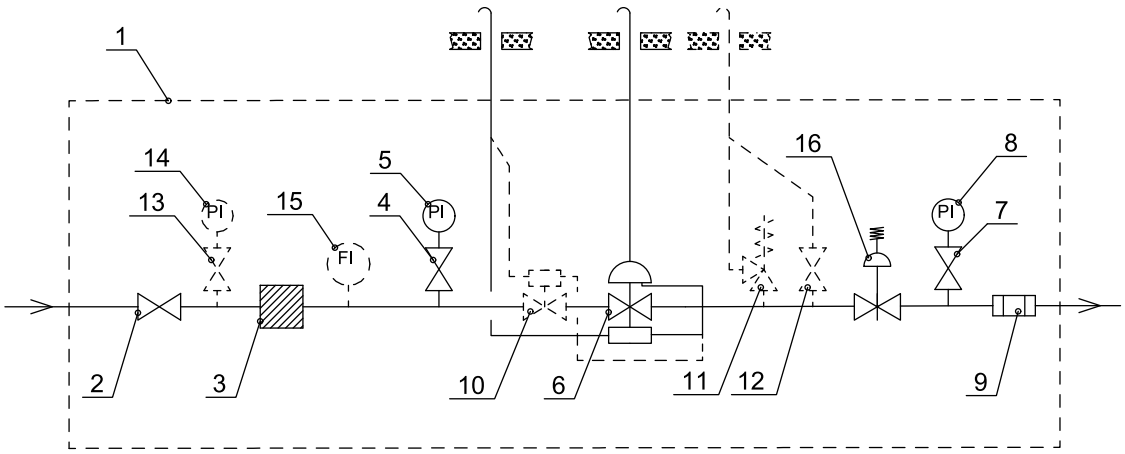

B311Z ver. 4

Pos.	Item	Pos.	Item
1	Gas pressure regulating assembly	9	Bellows compensator/gas hose
2	Ball valve	10	Safety shut-off valve, if not incl. in press. regulator
3	Gas filter	11	Safety relief valve, if not incl. in press. regulator
4	Pressure gauge valve	12	Blow-off, when necessary
5	Pressure gauge, high pressure	13	Pressure gauge valve, when necessary

Pos.	Item	Pos.	Item
6	Pressure regulator with safety shut-off valve and safety relief valve	14	Pressure gauge, high pressure, when necessary
7	Pressure gauge valve	15	Fuel flow meter, can also be on low pressure side, when necessary
8	Pressure gauge, low pressure	16	Pressure regulator

3.7 Installing gas nozzle adjusting band (LPG)

! Note	This information applies only when liquified petroleum gas (LPG) is used.

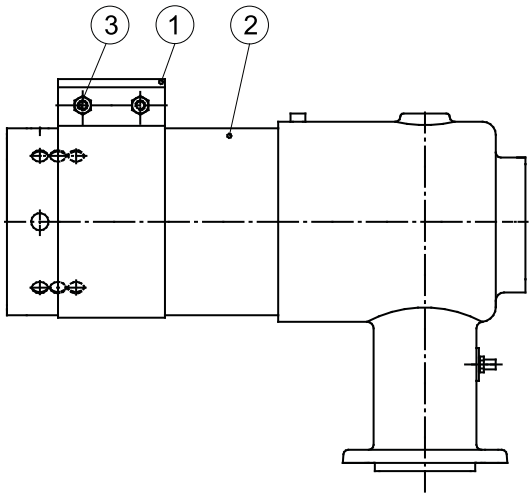

1 Adjusting band
2 Gas nozzle
3 Fixing screw of adjusting band

SAATOPANTAIMG ver. 2

When using liquified petroleum gas (LPG), install the adjusting band in the gas nozzle to adjust the square area of the nozzle apertures.

- By default, the adjusting band is installed to overlap the apertures by approx. 50 %.
- Adjust the final position of the band according to the capacity demand.
- Note the quantity of gas flow in relation to function of the compound regulator.
- Check the combustion values with flue gas analysis.

3.8 Installing hoses

Avoid torsion stress on hoses

Leave neutral hose ends long enough	
Use rigid pipe bends when necessary	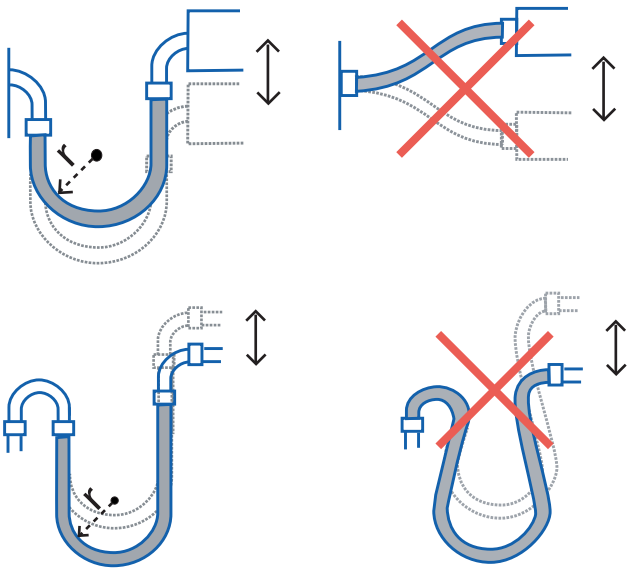

Minimum bend radius

Hose diameter	Minimum bend radius (r)	Minimum bend radius (r)
Ø 12	130 mm	5.12 in
Ø 15	130 mm	5.12 in
Ø 22	170 mm	6.69 in

3.9 Oil supply site diagram, example

Diagram

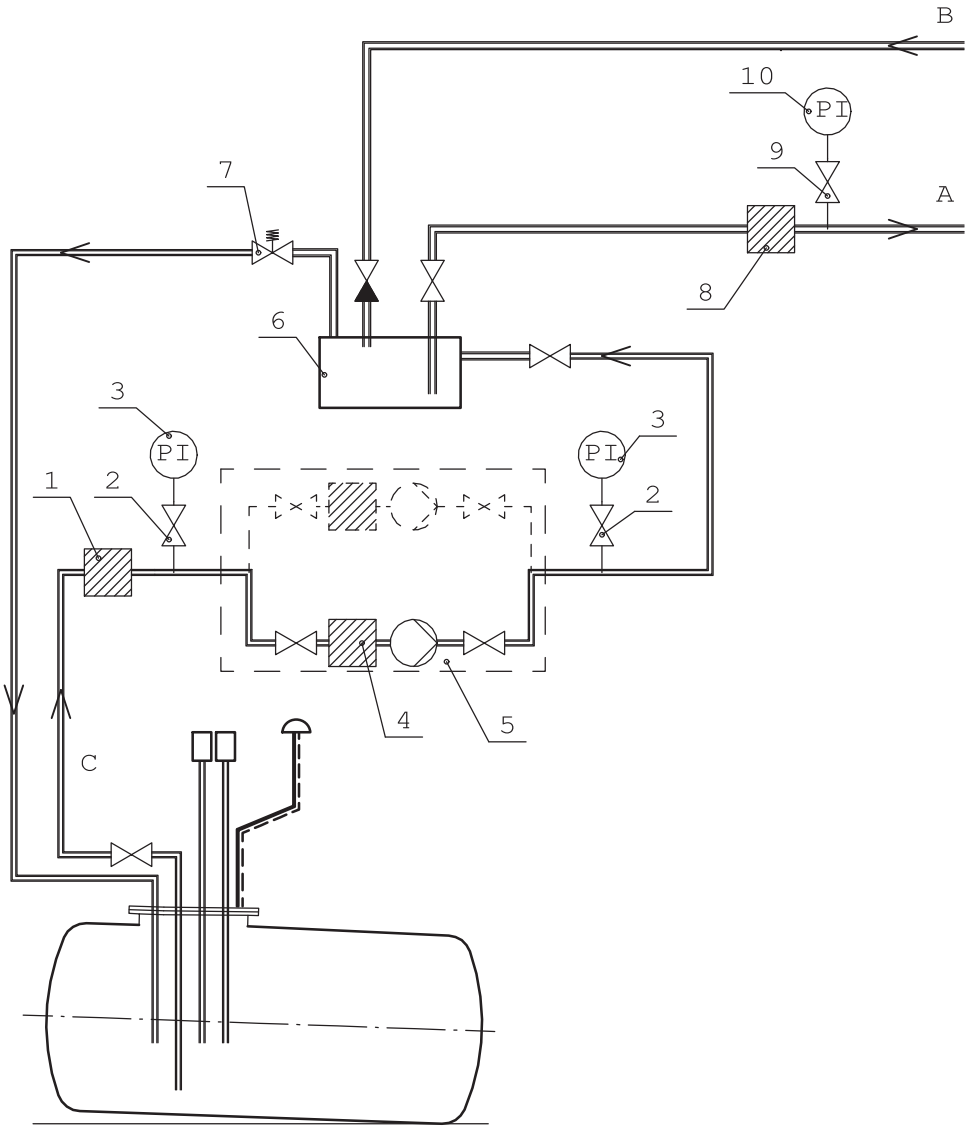

B-528V ver. 1

Pos.	Item	Details	Pos.	Item	Details
1	Filter	400 µm	8	Filter	125 µm
2	Pressure gauge cock		9	Pressure gauge cock	
3	Pressure gauge	Max. low pressure -0,3 bar	10	Pressure gauge	Oil pressure 1 - 5 bar
4	Filter	250 µm			
5	Pumping unit		A	Oil to burner	
6	Air/gas separator		B	Oil from burner	
7	Pressure regulating valve		C	Oil to pumping unit	

Pumping unit minimum output equation:

Required minimum output [kg/h] =	(oil flow to be burned kg/h + 150 kg/h)×1,2

3.10 Connecting to oil line

Two-pipe system

The burner is equipped for two-pipe system. Two-pipe system has separate suction and return lines for oil.

! Note	Fit oil filter according to PI diagram.

! Note	Pay attention to the instructions provided by the pump manufacturer when dimensioning the pipeworks.

3.11 Installing FGR duct system

FGR duct system

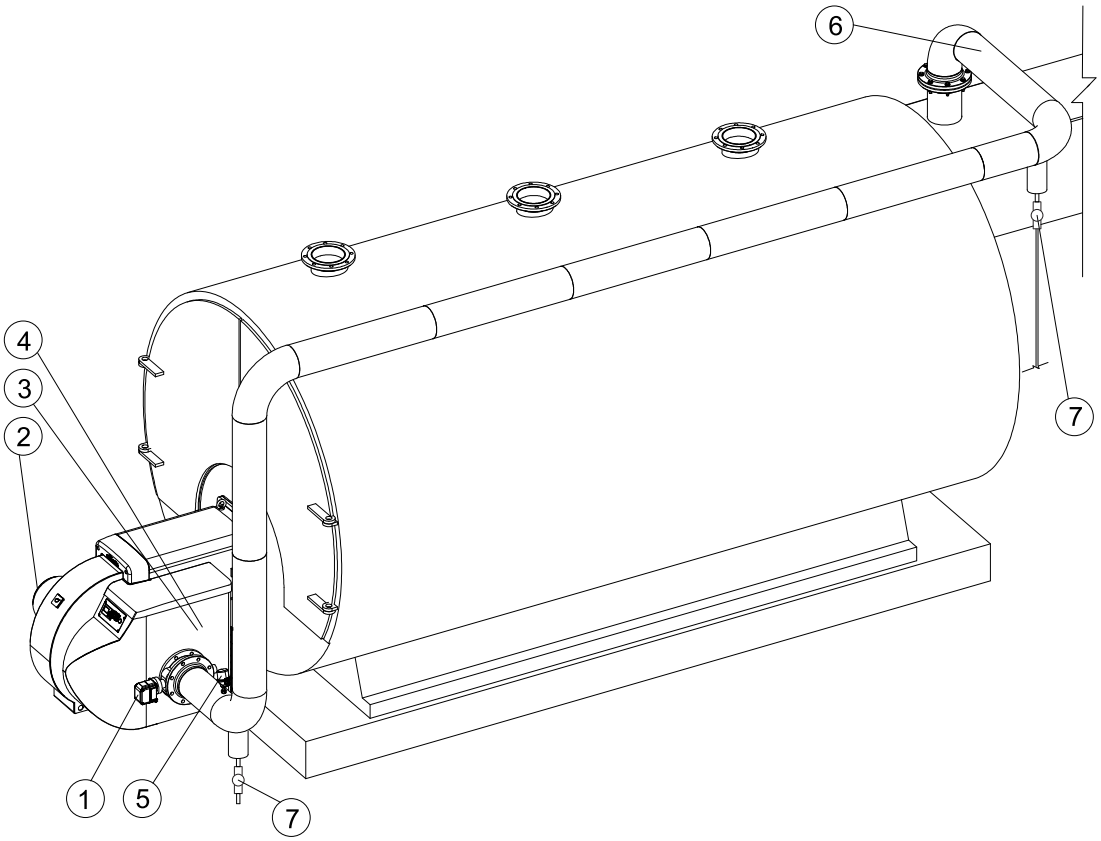

FGR Installation_monoblock ver. 3

Pos.	Item	Pos.	Item
1	Control damper	5	Temperature sensor
2	Combustion air fan	6	FGR duct
3	Combustion air throttle valve	7	Condensate drain valve
4	Combustion air		

In monoblock burner constructions, pos. 3 and 4 are integrated parts of the burner.

Burner model	Minimum diameter of FGR pipe	Minimum diameter of FGR pipe
Group 4	**DN**	**Inches**
350 M	200	6”
450 M	200	8”

Designing FGR piping

When designing the piping, consider the special circumstances of FGR operation.

The temperature in the piping varies constantly during the operation causing expansion and contraction of the pipes. The temperature differences also cause condensation in the pipe line.

In long pipe runs the pipe line length can change by over 25 mm per 100 °C (1” per 212° F). Thus extra load builds up on pipe connection point, which may result in component failures.

Apply the following rules of thumb for the construction:

- Use carbon or stainless steel for FGR piping. Pipe wall must not be too thick.
- Route the duct with a minimum number of elbows, still allowing a normal expansion and contraction of the duct. Place pipe supports to avoid excessive load to pipe connection.
- Leave space for the pipe joint movement during the expansion and contraction of the duct.
- Provide condensation drains, if needed. Check the drain volume needs.

To mount FGR duct system:

1. Place the inlet to the stack as close as possible to the boiler or economizer. Set cutting in 45° angle.
2. Set control damper close to the burner.
3. Finish the FGR duct pipe joint carefully with seal welding, flange or screw connection. Make sure that the joint is tight and no air can enter the duct.
4. Place condensate drains both at the beginning and the end of pipe line.
5. Install one drain upstream from the FGR control valve, and another in the FGR shut-off valve, if used.
6. In case of heavy condensation, add a condensate drain to the bottom of the housing.
7. Anchor supports to provide stability in the duct.

CAUTION

Excessive load on pipe line may damage burner or its components. The construction must be self-supporting.

Installing temperature sensor

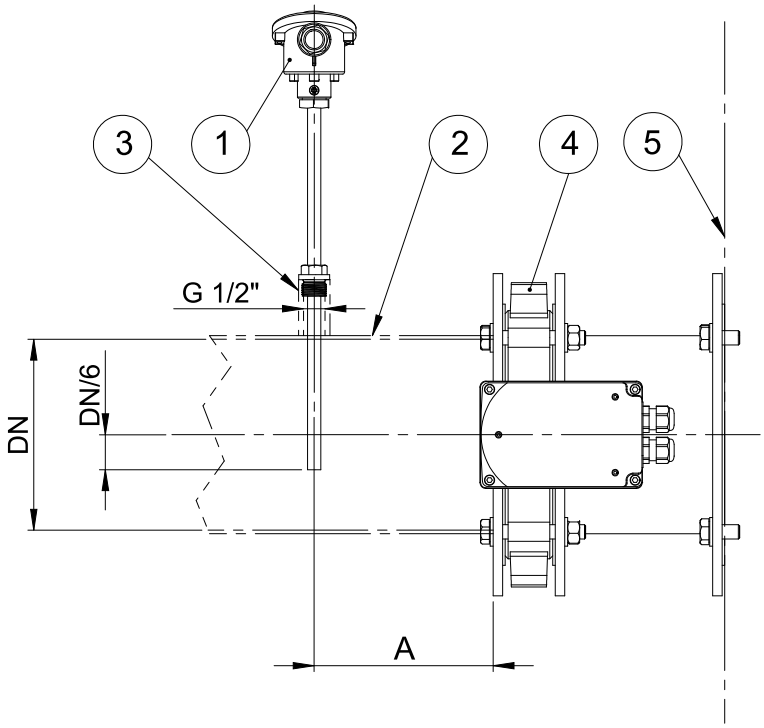

D055288 ver. 1

1	Temperature sensor	4	Butterfly valve
2	FGR pipe (*)	5	Burner
3	Sleeve (*)	A	Min. 200 mm Min. 7.87 in
* not included in delivery			

3.12 Electrical connections

Connect burner according to the electrical diagrams delivered with burner.

Adhere to general and local standards and regulations as well as requirements set on the connections of electrical equipment. Configure burner installation with a switch that allows it to be disconnected from the low-voltage supply mains.

Grounding must be in order before commissioning burner.

See electrical diagram for maximum cable lengths.

Connection to power supply is implemented with two separate supply connections. The supply of the control circuit of switching device directly to the burner switching base and supply to the fan motor output are implemented according to the site. The motor output is cabled both to the fan motor and control circuit to the burner wiring base.

Separate the base insulated wires of different voltage circuits from each other.

- When using frequency converter, do cabling work and grounding according to manufacturer instructions.
- Locate frequency converter as near to motor as possible to avoid interference caused by long cabling.
- Separate supply cables from control and bus cables in cable rack if they cannot be installed in separate cable racks.
- Check that shielded cables have proper connections.

4 Commissioning

4.1 First start-up

! Note	Vent fuel lines before first start-up.

CAUTION	After the first start-up check the cleanliness of the filter weekly and replace if necessary. If the filter remains clean, inspection period can be extended to one month.

CAUTION	Pump must not operate without oil. Vent the oil pump before initial start-up and when changing the pump.

CAUTION	While adjusting burner, make sure that minimum and maximum values for burner capacity are not exceeded. Values are marked on the type label.

DANGER !	Fasten all safety covers, enclosures, and guards with all screws before start-up. Use appropriate tools.

DANGER !	If burner start-up fails consecutively two times, do not restart burner before carefully investigating the reason for the failure.

First start-up check list

Check the following before first start-up:

- instructions from boiler and burner manufacturers are followed
- piping is done properly, and joints on pipes and components have been tested for leaks
- check that all screws are in their places and carefully tightened after installation
- boiler and its components are in proper working order and ready for use
- there is adequate air inlet to boiler room for burner to have sufficiently air for combustion
- connections are correct and motor rotation direction is correct
- valves in supply line(s) are open and fuel is available at a suitable pressure
- manual control valves are in correct positions
- fuel filter is installed
- oil temperature and viscosity are correct
- chimney is properly connected, unobstructed and flue gas damper is open

To start the burner:
1. Open the fuel shut-off valves.
2. Switch on power supply.
3. Switch on the burner from the burner control switch.

To stop the burner:

Turn the burner control switch to OFF position.

4.2 Nozzle selection

Fuel consumption by boiler capacity

q = P/μ *Q	P = boiler capacity, kW μ = boiler efficiency, 0,80-0,95 Q = heat value, kWh/kg q = fuel demand, kg/h (Note! For all nozzles.)

Heat value for light fuel oil is approx. 11,86 kWh/kg and for heavy fuel oil approx. 11,22 kWh/kg. Check exact values from supplier.

Spill return nozzle Fluidics 12-W1

Table is applicable when atomizing viscosity is 5 mm²/s (cSt).

Nozzle No.	Max. throughput kg/h at oil pump pressure of 20 bar (2,0 MPa) when return line is closed	Min. throughput kg/h at oil pump pressure of 20 bar (2,0 MPa) when return line pressure is 7 bar (0,7 MPa)
40	40	10 *)
50	50	12 *)
60	60	15 *)
70	70	18
80	80	20
90	90	22
100	100	25
112	112	28
125	125	31
140	140	35
160	160	40
180	180	45
200	200	50
225	225	56
250	250	62
275	275	68
300	300	75
330	330	82
360	360	90
400	400	100
450	450	112
500	500	125

*) Oil quantity return pressure10 bar (1,0 MPa)

When using any other oil pump pressure as shown in table, the throughput of nozzle is:

$$A \times \sqrt{\frac{P2}{P1}}$$

PAINEKAAVA1 ver. 2

A = Table value

P1 = 20 bar (Fluidics)

P2 = Oil pump pressure

For example: nozzle 12-W1 No. 100, oil pump pressure 30 bar (3,0 MPa) ⇒ throughput of nozzle is:

$$\text{Max.} \quad 100\ \text{kg/h} \times \sqrt{\frac{30\ \text{bar}}{20\ \text{bar}}} \approx 122\ \text{kg/h}$$

PAINEKAAVA2 ver. 2

Calculated minimum output on return pressure 9 - 12 bar is:

$$\text{Min} = \frac{\text{Max kg/h}}{2{,}5}$$

PAINEKAAVA4 ver. 2

Oil pump operating pressure (atomizing pressure) in heavy fuel oil is 2500 - 3000 kPa (25 - 30 bar).

Oil pump operating pressure (atomizing pressure) in light fuel oil is 2000 - 2500 kPa (20 - 25 bar).

Spill return nozzle Fluidics 12-W2

Table is applicable when atomizing viscosity is 5 mm²/s (cSt).

Nozzle No.	Max. throughput kg/h at oil pump pressure of 25 bar (2,5 MPa) when return line is closed	Min. throughput kg/h at oil pump pressure of 25 bar (2,5 MPa) when return line pressure is 7 - 10 bar (0,7 - 1,0 MPa)
40	40	10
50	50	12
60	60	15
70	70	18
80	80	20
90	90	22
100	100	25
112	112	28
125	125	31
140	140	35
160	160	40

Nozzle No.	Max. throughput kg/h at oil pump pressure of 25 bar (2,5 MPa) when return line is closed	Min. throughput kg/h at oil pump pressure of 25 bar (2,5 MPa) when return line pressure is 7 - 10 bar (0,7 - 1,0 MPa)
180	180	45
200	200	50
225	225	56
250	250	62
275	275	68
300	300	75
330	330	82
360	360	90
400	400	100
450	450	112
500	500	125
550	550	138
600	600	150
650	650	162
700	700	175

When using any other oil pump pressure as shown in table, the throughput of nozzle is

$$A \times \sqrt{\frac{P2}{P1}}$$

PAINEKAAVA1 ver. 2

A = Table value

P1 = 25 bar (Fluidics)

P2 = Oil pump pressure

For example: Nozzle 12-W2 No. 100, oil pump pressure 30 bar (3,0 MPa) ⇒ throughput of nozzle is:

$$100\ \text{kg/h} \times \sqrt{\frac{30\ \text{bar}}{25\ \text{bar}}} \approx 110\ \text{kg/h}$$

PAINEKAAVA3 ver. 2

Calculated minimum output on return pressure 9 - 12 bar is:

$$\text{Min} = \frac{\text{Max kg/h}}{2{,}5}$$

PAINEKAAVA4 ver. 2

Oil pump operating pressure (atomizing pressure) in heavy fuel oil is 2500 - 3000 kPa (25 - 30 bar).

Oil pump operating pressure (atomizing pressure) in light fuel oil is 2000 - 2500 kPa (20 - 25bar).

Spill return nozzle Bergonzo CBM B5 AA

Table is applicable when atomizing viscosity is 12 mm²/s (cSt)

Nozzle No.	Max. throughput kg/h at oil pump pressure of 25 bar (2,5 MPa) when return line is closed	Min. throughput kg/h at oil pump pressure of 25 bar (2,5 MPa) when return line pressure is 3 bar (0,3 MPa)
450	450	90
500	500	100
600	600	120
700	700	140
800	800	160
900	900	180

For example: Nozzle CBM B5 AA No. 450, oil pump pressure 30 bar (3,0 MPa) ⇒ throughput of nozzle is:

$$450 \text{ kg/h x } \sqrt{\frac{30 \text{ bar}}{25 \text{ bar}}} \approx 493 \text{ kg/h}$$

PAINEKAAVA5 ver. 2

! Note	When viscosity increases the quantity of oil spraying from nozzle increases approx. 5-15%.

4.3 Adjusting combustion head

Combustion head components

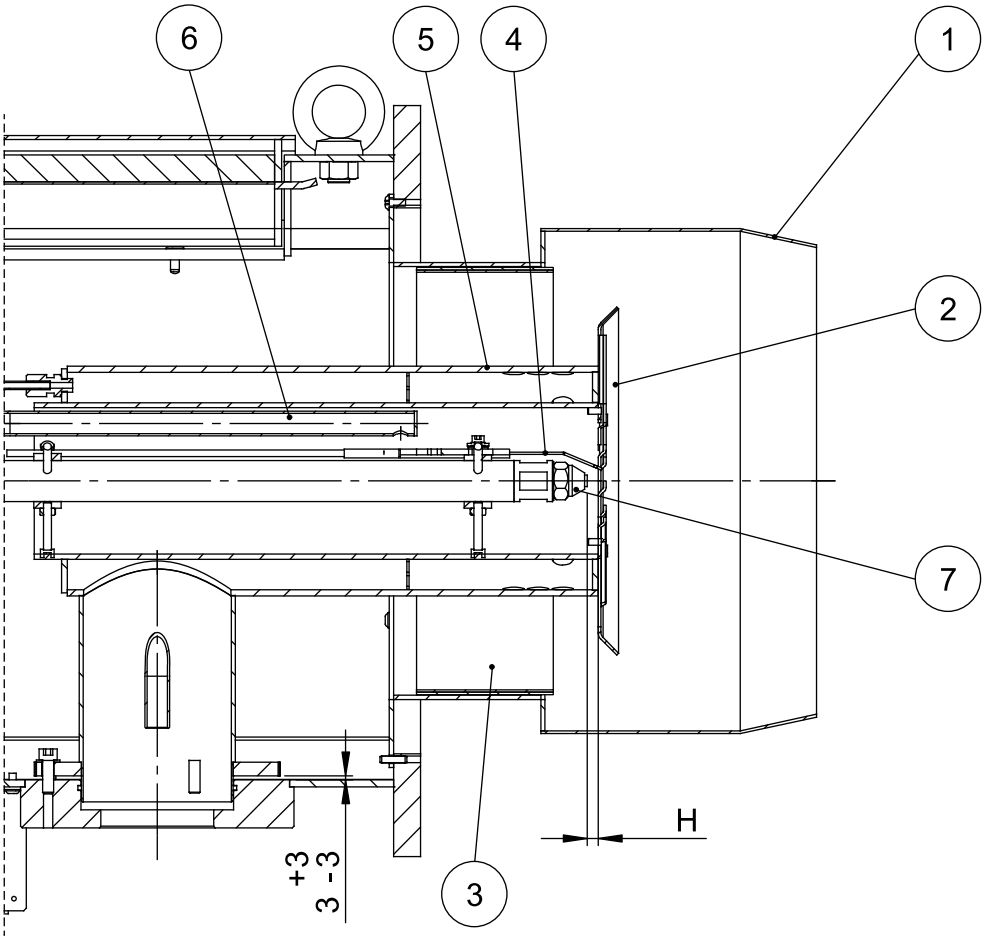

D042327 ver. 1

Pos.	Item
1	Combustion head
2	Diffuser disc
3	Adjustment ring
4	Ignition electrode
5	Gas nozzle
6	Ignition gas nozzle
7	Oil nozzle

H	8 mm	0.31 in

4.4 Setting ignition electrodes

Check and set ignition electrode spark gap and the distance of the nozzle to ignition electrodes and diffuser disc as shown on the drawing.

Maximum tightening torque of ignition electrodes is 1 Nm.

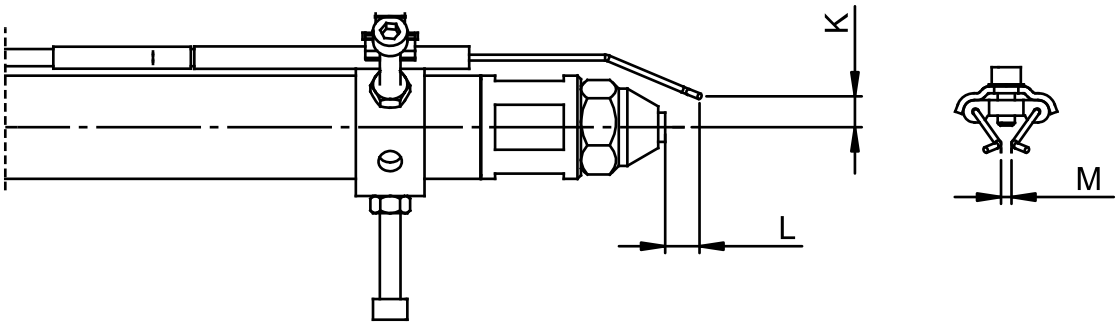

D042321 ver. 1

L	10 mm	0.39 in
K	9 mm	0.35 in
M	3 mm	0.12 in

4.5 Adjusting supply oil pressure

! Note	In light fuel oil burners inlet pressure should be 1–4.5 bar or 14.5–65.3 PSI.

! Note	Pressure must not exceed 5 bars anywhere in the oil line.

4.6 Oil pump

! Note	Check the oil pump model used in your burner from the manufacturing card or the information plate on the pump.

Fuel	Typical atomizing pressure	Oil hose connection
Light fuel oil #2 fuel oil	20–25 bar 290–261 PSI	suction R ½” return R ½”

To adjust pump pressure:

- Use the pressure adjustment screw.
- Turn the screw clockwise to increase the pressure.
- Install a pressure gauge/valve assembly, if necessary.

To vent the oil pump:

1. Loosen the plug of the pressure gauge port.

! Note	Do not remove the plug.

2. Let the burner operate for a while. Air bubbles come out of the hole.
3. When no more bubbles come out, retighten the plug carefully.

CAUTION	If the atomizing pressure during capacity change from max. to min. exceeds 2 bar / 29 PSI the pump must be replaced.

! Note	The pump is self-priming. The pump is intended for use in two-pipe system.

Oil pump AFI

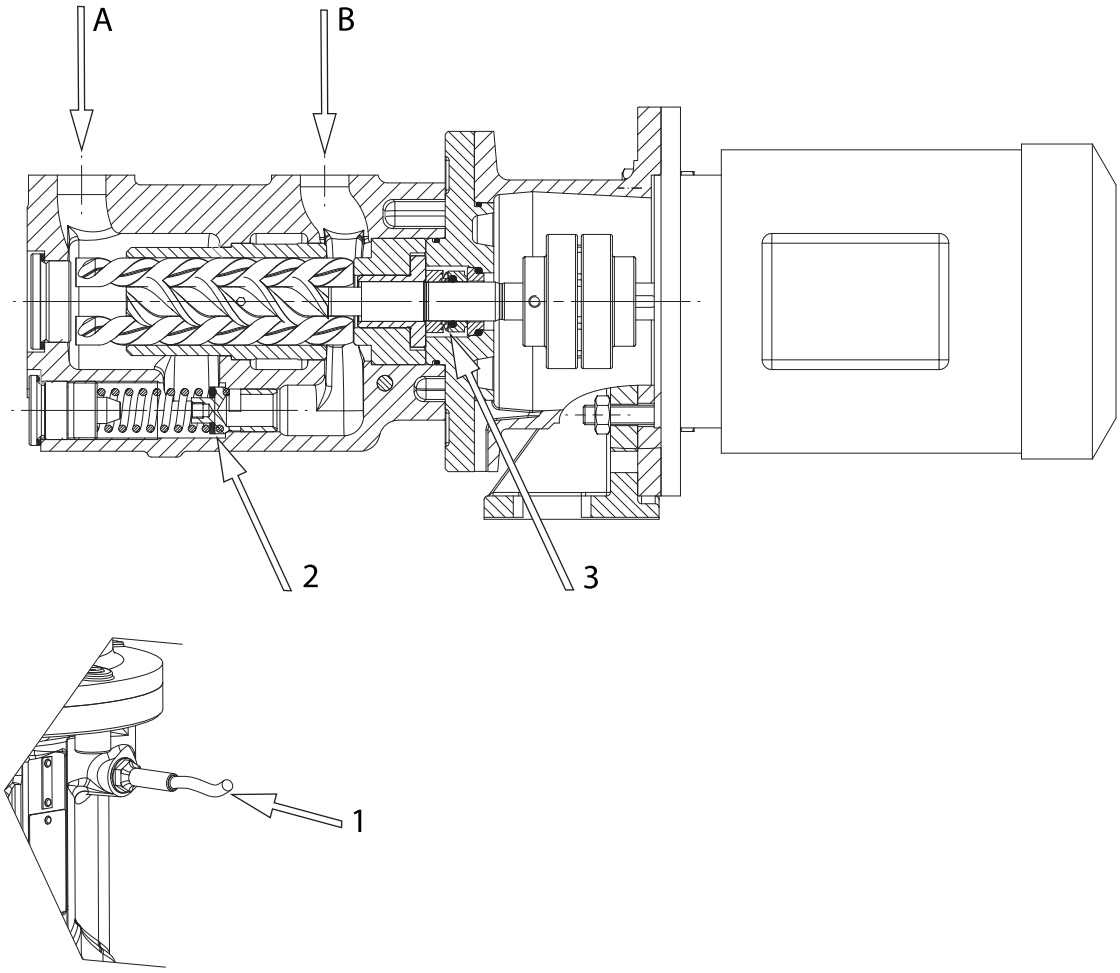

AFI-pump ver. 1

Pos.	Item	Pos.	Description
1	Heating	A	Oil inlet
2	Pressure relief valve	B	Oil outlet
3	Shaft seal		

Technical data		
Max oil inlet pressure to burner	5 bar	72.5 PSI
Inlet oil viscosity range	4–70 mm²/s (cSt)	4–70 mm²/s (cSt)
Min oil inlet pressure to burner (Depends on oil temperature at the pump.)	2.5 bar or higher	36.25 PSI or higher
Inlet oil maximum temperature	+ 150 °C	+ 302 °F
Filtration degree to pump	max. 125 µm	max. 125 µm

Oil pump T

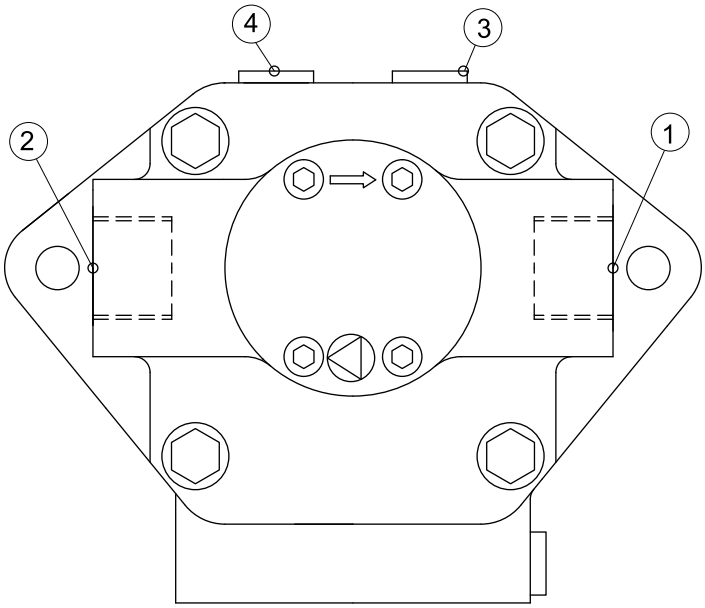

A311BT ver. 4

Pos.	Item	Pos.	Item
1	Suction line connection	3	Incoming oil pressure gauge port
2	Oil to nozzle	4	Oil pressure gauge port (to nozzle)/air venting

Technical data		
Viscosity limit for incoming fuel: light fuel oil	4–12 mm²/s (cSt)	4–12 mm²/s (cSt)
Viscosity limit for incoming fuel: heavy fuel oil	4–70 mm²/s (cSt)	4–70 mm²/s (cSt)
Max oil inlet pressure	5 bar	72.5 PSI
Pump operating pressure (atomizing pressure)	20–25 bar	290 PSI
Filtration degree to pump	max. 300 µm	max. 300 µm

Oil pump TA

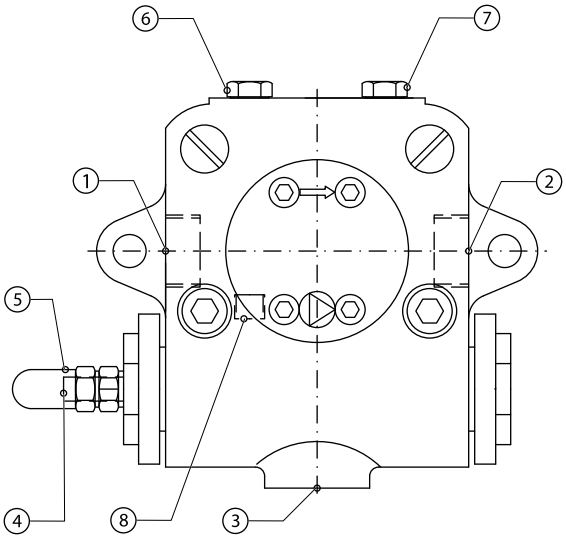

A212ZTA ver. 3

Pos.	Item	Pos.	Item
1	Oil suction connection	5	Protective cap
2	Oil to nozzle	6	Oil inlet pressure/gauge port
3	Oil return connection	7	Pressure gauge connection plug / air venting
4	Pressure adjustment	8	Opening for bypass plug

Pump has an integrated pressure regulation system.

Technical data		
Operating viscosity	3–75 mm²/s (cSt)	3–75 mm²/s (cSt)
Inlet oil maximum pressure	5 bar	72.5 PSI
Inlet oil maximum temperature	+ 150 °C	+284 °F
Operating pressure (=atomizing pressure)	7–40 bar	101–580 PSI
Filtration degree to pump	max. 300 µm	max. 300 µm

Oil pump TAR

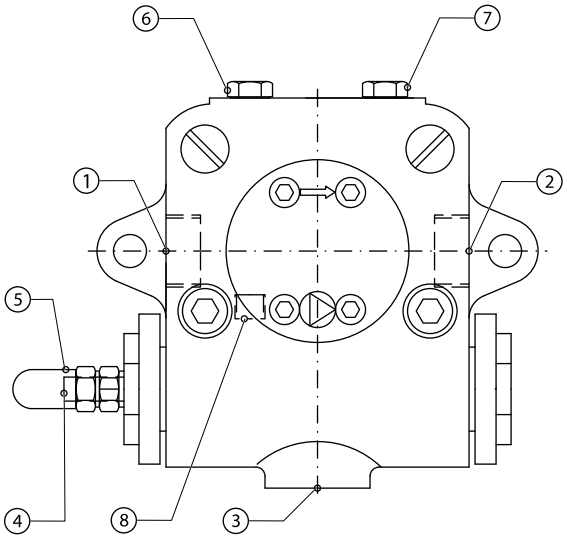

A212ZTA ver. 3

Pos.	Item	Pos.	Item
1	Oil suction connection	5	Protective cap
2	Oil to nozzle	6	Oil inlet pressure/gauge port
3	Oil return connection	7	Pressure gauge connection plug / air venting
4	Pressure adjustment	8	Opening for bypass plug

Pump has an integrated pressure regulation system.

Technical data		
Operating viscosity	1.25–75 mm²/s (cSt)	1.25–75 mm²/s (cSt)
Inlet oil max. pressure	5 bar	72.5 PSI
Inlet oil max. temperature	+ 150 °C	+ 302 °F
Operating pressure (=atomizing pressure)	TAR 2/3/4: 7–40 bar TAR 5: 7–30 bar	TAR 2/3/4: 101–580 PSI TAR 5: 101–435 PSI
Operating pressure	1,5 mm²/s (cSt): max. 25 bar 2 mm²/s (cSt): max. 30 bar 3 mm²/s (cSt): max. 35 bar (30 bar for TAR5)	1,5 mm²/s (cSt): max. 362 PSI 2 mm²/s (cSt): max. 435 PSI 3 mm²/s (cSt): max. 507 PSI (435 PSI for TAR5)
Filtration degree to pump	max. 300 µm	max. 300 µm

4.7 Adjusting atomizing pressure

Oil pumps AFI and T

To adjust the thermal output of the burner, change the nozzle size and adjust the oil atomizing pressure. Pump provides a constant pressure. Atomizing pressure is adjusted with a separate pressure regulating valve.

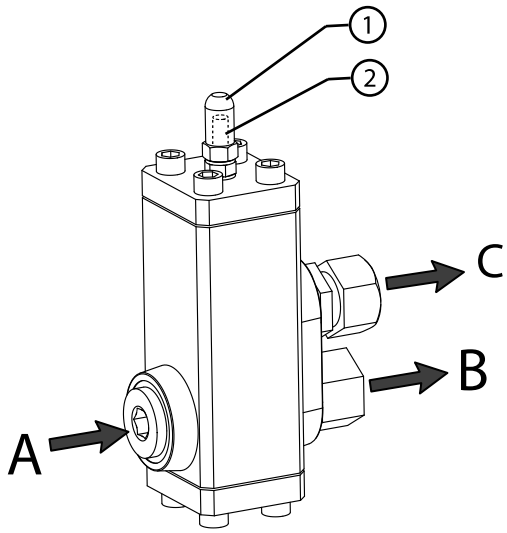

TVSAADIN ver. 2

Regulator valve option 1

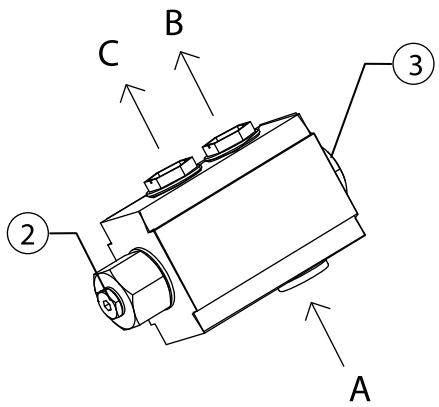

TVSAADINDANFOSS ver. 3

Regulator valve option 2

Pos.	Item	Pos.	Description
1	Protective cap	A	Oil from pump
2	Pressure regulation	B	Oil to nozzle
3	Pressure gauge connection	C	Return oil

4.8 Oil pump coupling components and adjusting

Oil pumps J, E, PON, TAR, T, TA and UHE

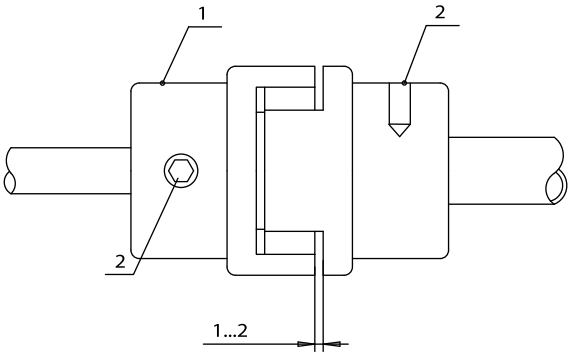

A296X ver. 2

1	Coupling head
2	Fixing screw

1. Set coupling between motor and oil pump.
2. Set the distance between coupling heads to be 1 – 2 mm / 0.039 – 0.078 in.

! Note	If coupling needs to be removed or adjusted during maintenance work, you must first remove the air damper.

Oil pump AFI

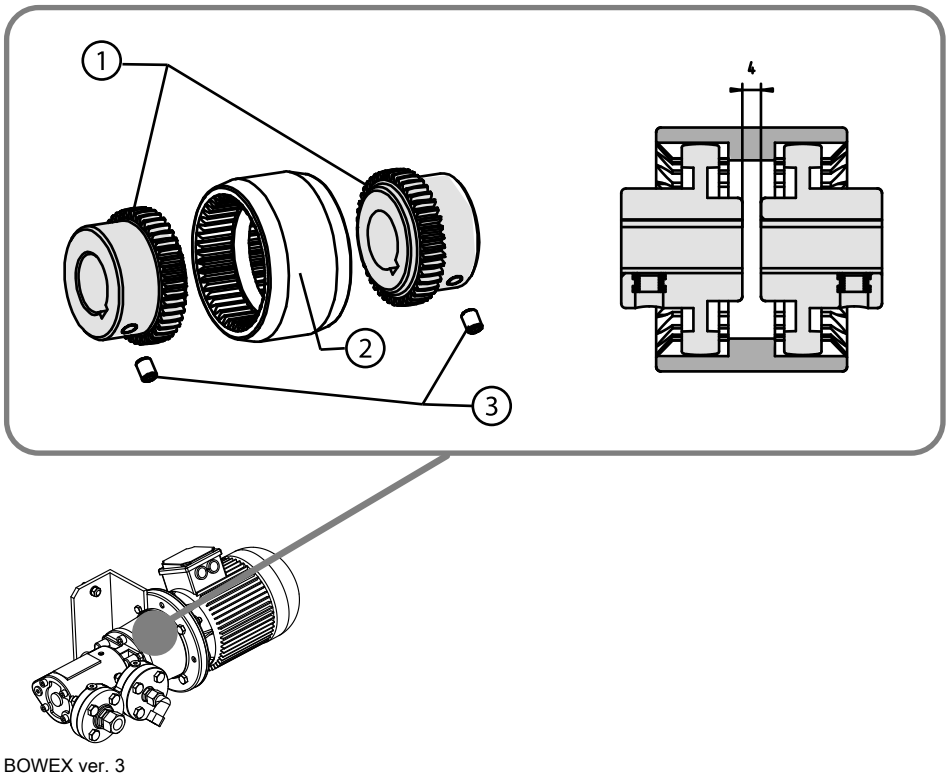

BOWEX ver. 3

Pos.	Item
1	Hub
2	Sleeve
3	Set screw

Set the distance between the hubs. See the image.

! Note	Note the correct direction of the hubs.

4.9 Adjusting combustion differential air pressure switch

Combustion differential air pressure switch

The combustion differential air pressure switch monitors pressure difference generated by burner fan.

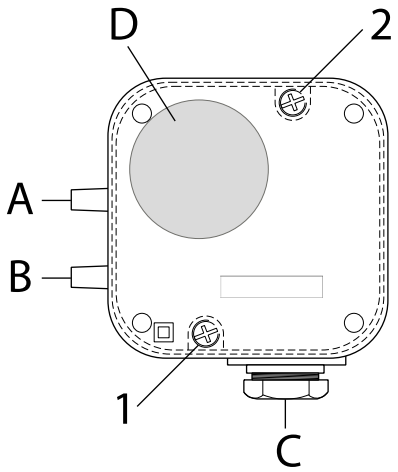

LGW A2 ver. 2

A	Higher pressure
B	Lower pressure
C	Electrical connections
D	Setup switch
1 and 2	cross head screw

If pressure difference does not rise above switch setting value, burner shuts down. Differential air pressure switch should be set to trigger before CO-concentration of combustion product exceeds 1 vol%, 10 000 ppm.

Burner size	Factory setting mbar	Factory setting PSI
450 M	45	0.70

When using frequency converter (WD200):
- factory setting is set to 10 mbar / 0.15 PSI
- maximum adjustment range should be between 35Hz and 50Hz

! Note	Due to varying installation location circumstances, differential air pressure switch setting may have to be reset to meet the actual conditions in order to ensure proper burner function. Make sure not to exceed the given CO limit.

To adjust differential air pressure switch setting at current nominal burner capacity

1. Open the protective cover of the differential air pressure switch.
2. Start the burner.
3. Turn the switch slowly to the maximum until the burner shuts down.
4. Turn the switch approx. 5 mbar from this point backwards (to the minimum).
5. Close the protective cover and reset.

4.10 Adjusting gas pressure switch

Gas pressure switch, max.

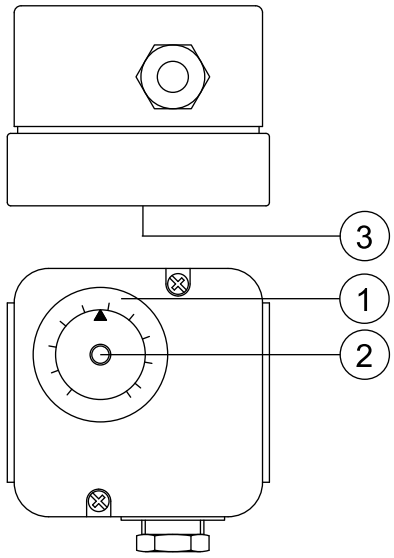

A416M ver. 3

1 Adjusting scale
2 Reset, gas pressure switch, max.
3 Pressure measuring connection

Gas pressure switch max. should cause a permanent interlocking if burner capacity increases to be more than 1.15 times the nominal value, or if the pressure exceeds more than 1.3 times the nominal pressure.

Burner size	Factory setting mbar	Factory setting PSI
450 M	52	0.75

To adjust gas pressure switch to maximum, without flue gas analyzer

Adjust gas pressure switch after burner adjustments and flue gas analysis.

1. Turn gas pressure switch adjusting scale to the maximum position.
2. Run burner to the desired maximum capacity.
3. Increase burner capacity to be 1.15 times the desired maximum capacity by increasing gas pressure.
4. Slowly turn switch to the minimum until burner shuts down. Now the adjustment is correct.
5. Reset gas pressure switch.
6. Run burner back to the desired maximum capacity by decreasing gas pressure.

To adjust gas pressure switch to maximum, with flue gas analyzer

Adjust gas pressure switch after burner adjustments and flue gas analysis.

1. Turn the gas pressure switch to its maximum value
2. Adjust burner to the desired maximum capacity; for example so that O_2 content = 2.5–3.0 % and CO content < 50 ppm.
3. Increase the capacity by raising the gas pressure until the O_2 content = 1.0 % and CO content < 2000 ppm.

4. Slowly turn the gas pressure switch towards its minimum setting until the burner shuts off. The pressure switch is now correctly configured.
5. Reset the error.
6. Decrease gas pressure to normal value. Check combustion values.

To adjust gas pressure switch, min.

Burner size	Factory setting mbar	Factory setting PSI
450 M	20	0.29

Scale precision ±15 %
1. Open switch transparent cover.
2. Set burner to full capacity.
3. Set the switch to trigger on a 20–40 % lower pressure than the gas inlet pressure to burner.
4. Close cover.

If gas pressure switch triggers a temporary burner shutdown during burner start-up or during operation, it has to be set on lower pressure.

Gas pressure switch, gas valve proving

Gas valve leaking is tested by using a pressure switch. Switch adjustment according to previous instructions.

4.11 Setting variable speed module parameters

Variable speed module (VSM) is an optional accessory that is connected to burner control through LSB bus. Electrical connections (sensors, mA/V messages etc.) to burner control are made according to electrical connections.

VSM module provides 0/4-20mA or 0-10V setpoint output for frequency converter. In addition there is a changeover contact in the burner to get frequency converter started.

VSM basic settings are adjusted with DIP switches and parameter settings with PC application (LSB remote).

DIP switches are located on the module cover. Following tables show factory settings underlined:

DIP1	Setting
0	CAN terminating resistor deactivated
1	CAN terminating resistor activated

DIP 2–3, product family		
DIP2	DIP3	LSB family
<u>0</u>	<u>0</u>	1
0	1	2
1	0	3
1	1	4

DIP 4–7, select sensor input				
DIP4	DIP5	DIN6	DIN7	Input/ value range
0	0	0	1	Namur sensor 600-7200 pls/Min
0	0	1	0	Namur sensor 300-3600 pls/Min
0	1	0	0	3-wire sensor 30-300 pls/Min
0	1	0	1	3-wire sensor 600-7200 pls/Min
0	1	1	0	3-wire sensor 300-3600 pls/Min
1	0	0	0	Current input 0-20 mA
1	0	0	1	Current input 4-20 mA

DIP 8, setpoint output	
DIP8	Setpoint output
0	0-20mA setpoint output
1	4-20mA setpoint output

To set parameters of the variable speed module

! Note	Before you can use the device you must set the parameters P0403 ... P0406 in the BurnerTronic.

Param. nr		Description	Factory setting
403	BT300	Specification of channel 4 functions: 0 = OFF 1 = Recirculation damper 2 = Fuel 3 = Air damper 4 = Reserved (error 107) 5 = Reserved (error 107) 6 = Reserved (error 107)	3
405	BT300	Channel release for curve set 1 Curve 1 = Oil Selection via bit pattern Channel 1 = Air → 1 Channel 2 = Gas → 0 Channel 3 = Oil → 1 Channel 4 = VSM →1	13
406	BT300	Channel release for curve set 2 Curve 2 = Gas Selection via bit pattern Channel 1 = Air → 1 Channel 2 = Gas → 1 Channel 3 = Oil → 0 Channel 4 = VSM → 1	11

Additional parameter 368

Param. nr		Description	Factory setting
368	BT300	Limit by which pre-ventilation can be completed with channel 4 (VSM). Pre-ventilation limit (also post-ventilation) is set with channel 4. Enter the upper limit to which the channel runs open during pre-ventilation. If you enter 999 (default value) the channel runs to its upper stop. Set the pre-ventilation limit for example with air dampers to shorten the pre-ventilation period. In this case, remember to assure the exchange of air.	999

Warning:
- A continuous output limits the setpoint. Note that you have to enter the range limits of the feedback manually. With continuous outputs the feedback value for the limitation is calculated and saved in the device during the automatic range-limit calculation.
- Note that the feedback reaches the value of the limitation during the automatic calculation of the range limits. The feedback is used for the monitoring of the channel's pre-ventilation position.
- After the activation or changing of the pre-ventilation limit of a continuous channel you have to run an automatic calculation of the range limits.

Refer to the variable speed module user instructions.

Parameter value setting 0–999 equals 0–100% setpoint output for variable speed module.

If burner fan motor nominal current value is exceeded, parameter value must be lowered.

While changing the parameter value the burner must get enough air during prepurge. During prepurge, the amount of air in the burner has to equal five times the volume of combustion chamber and flue gas channel (industrial applications).

4.12 Setting gas pressure regulator SKP

The operating area of the gas pressure regulator is determined by the spring installed inside the pressure regulator. There are three types of springs and their operating areas are described in the table below.

Springs can be ordered from Oilon Webshop.

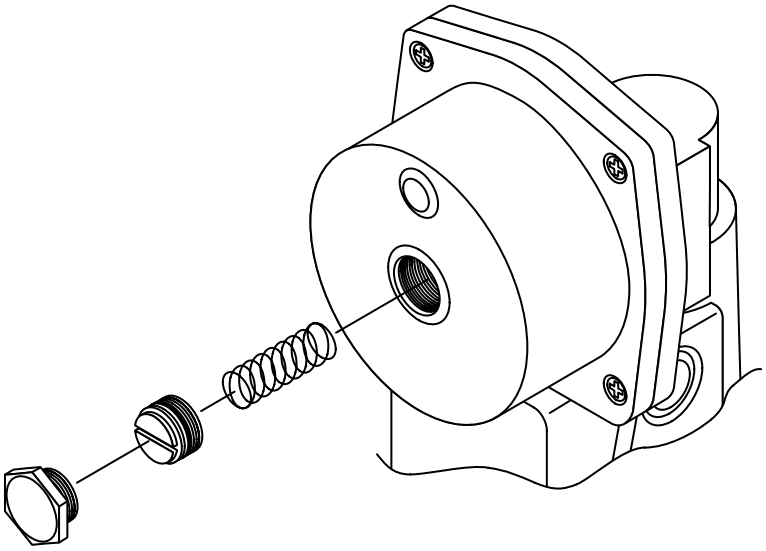

SKP ver. 1

To change spring:

1. Remove the plug.
2. Remove the slot-head screw by turning counter-clockwise with a chisel-point screwdriver.
3. Replace the spring.

Assemble in reverse order.

CAUTION

Excessive tightening of screws may damage the component.

Spring type	pG (mbar)	Δp / ⟲ 360	Color	Model
AGA29	≤ 22	2.2	blank	SKP25.0
AGA22	15 ... 120	11.9	yellow	SKP25.0
AGA23	100 ... 250	24.5	red	SKP25.0
AGA22	100 ... 700	-	yellow	SKP25.4
AGA23	≤ 1500	245	red	SKP25.4

Spring type	pG (in. W.C)	Δp / ⟲ 360	Color	
AGA29	≤ 8.8	2.2	blank	SKP25.0
AGA22	6.0 ... 48.2	11.9	yellow	SKP25.0
AGA23	40.2 ... 100.4	24.5	red	SKP25.0
AGA23	≤ 602.8	245	red	SKP25.4

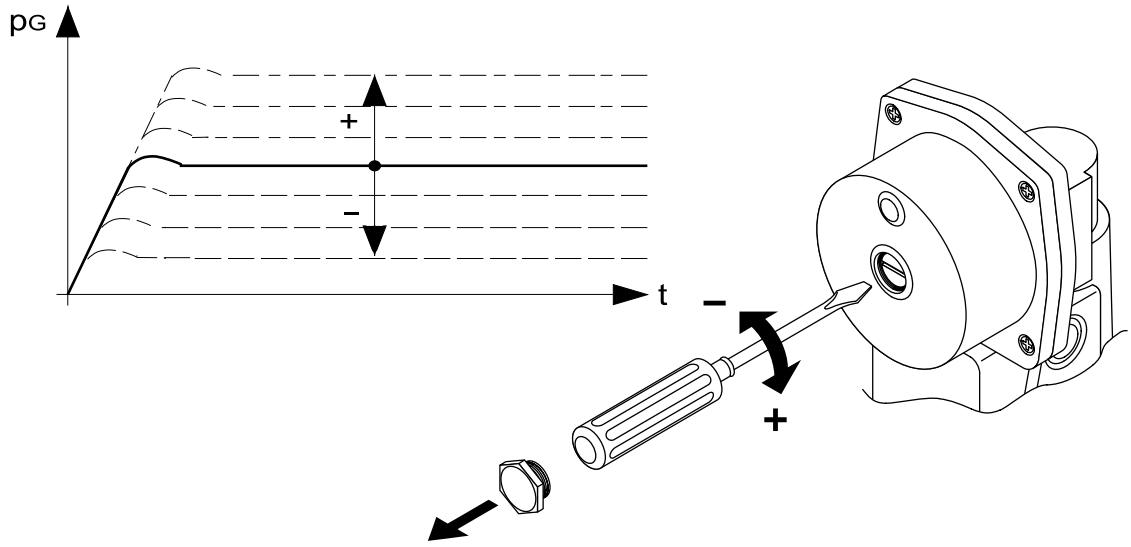

SKP2 ver. 1

To adjust gas pressure:

1. Remove the plug.
2. Adjust the outgoing pressure by turning the slot-head screw counter-clockwise with a chisel-point screwdriver.
   - When turning counter-clockwise, the pressure drops.
   - When turning clockwise, the pressure rises.

Measure the gas pressure with a pressure gauge when the burner is on.

4.13 Setting gas pressure regulator FRS

The operating area of the gas pressure regulator is determined by the spring installed inside the pressure regulator. The factory setting of standard spring p_2 is 10-30 mbar.

Springs can be ordered from Oilon Webshop.

Setting pressure regulator at minimum load

1. Start burner at minimum load. At minimum load throttle valve setting is 5°-10°.
2. Adjust combustion to safe level using flue gas analysis. Measure pressure regulator outlet pressure from gas valve measuring point.
3. Turn adjustment spindle clockwise until gas amount corresponds with required burner minimum load. Check combustion using flue gas analysis, when raising pressure. Adjust burner if necessary.

! Note	Check gas valve measuring point position from the gas valve manufacturer manual.

! Note	Check and adjust pressure regulator outlet pressure level finally when burner operates on full load.

To adjust outlet pressure

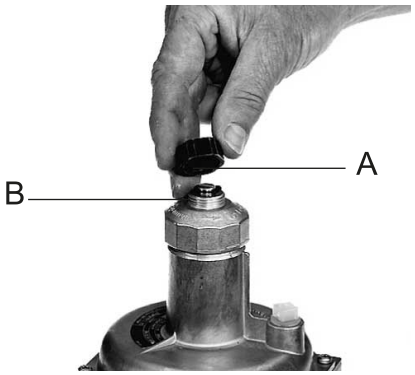

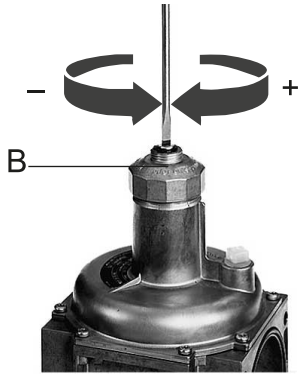

219598a ver. 1

1. Unscrew protective cap **A**.
2. Use a chisel-point screwdriver. to adjust spindle **B**:
   a. Turn the spindle B clockwise. This increases the outlet pressure.
   b. Turn the spindle B counterclockwise. This reduces the outlet pressure.
3. Check the setpoint.
4. Screw on the protective cap **A**.

To replace setting spring

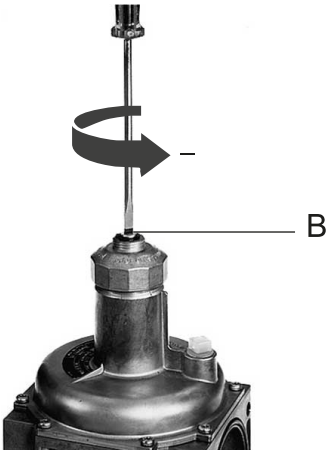

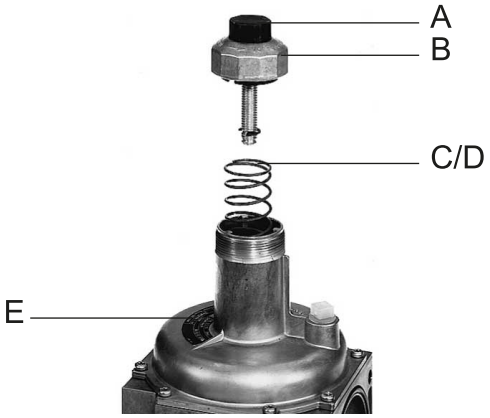

219598b ver. 1

1. Remove protective cap **A**. Release spring by turning adjustment spindle **B** counterclockwise. Turn spindle to stop.
2. Unscrew complete adjustment spindle **B** and remove spring **C**.
3. Insert new spring **D**.
4. Assemble complete adjustment spindle and adjust desired offset.
5. Screw on protective cap **A**. Stick adhesive label **E** onto typeplate.

CAUTION	Excessive tightening of screws may damage the component.

Sealing final settings

1. Check pressure regulator outlet pressure. If necessary, adjust it to be sufficient for full load setting.
2. Finally seal setting by threading wire through sealing holes in protecting cap and pressure regulator body.

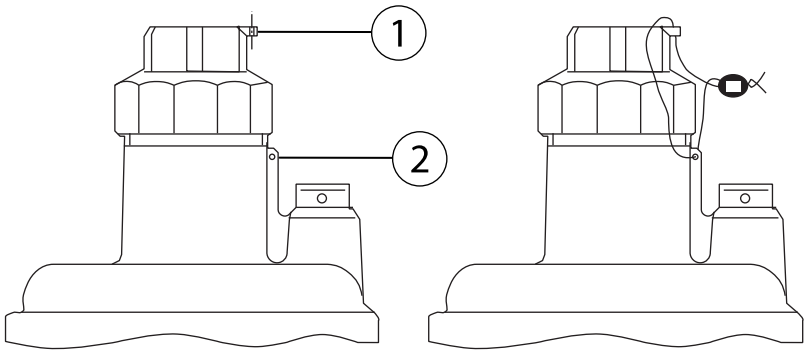

FRS4 ver. 2

1 Protecting cap sealing hole, ø 1.5 mm
2 Body sealing hole, ø 1.5 mm

	Setpoint spring range (mbar)	Color	Nominal width Rp/DN					
			Rp 1 1/2, DN40	Rp 2, DN 50	Rp 2 1/2, DN65, 80	DN 100	DN 125	DN 150
Spring 1	2,5...9	brown	229 851	229 874	229 883	229 892	229 901	229 909
Spring 2	5...13	white	229 852	229 875	229 884	229 893	229 902	229 910
Spring 3	5...20	orange	229 853	229 876	229 885	229 894	229 903	229 911
Spring 4	10...30	blue	229 854	229 877	229 886	229 895	229 904	229 912
Spring 5	25...55	red	229 869	229 878	229 887	229 896	229 905	229 913
Spring 6	30...70	yellow	229 870	229 879	229 888	229 897	229 906	229 914
Spring 7	60...110	black	229 871	229 880	229 889	229 898	229 907	229 915
Spring 8	100...150	pink	229 872	229 881	229 890	229 899	229 908	229 916
Spring 9	140...200	grey	229 873	229 882	229 891	229 900	243 416	243 417

4.14 Measuring gas pressure

General rules for gas pressure measurement

1. Shut off the burner.
2. Open the test point connection cover.
3. Attach a silicone hose to the test point connection. Attach a gauge to the other end of the hose.
4. Start the burner.
5. While the burner is running record gas pressure readings using the instructions below.
6. Perform adjustments if needed.
7. Shut off the burner.
8. Finally close all the test point connections and remove measurement equipment.

! Note	Make all adjustments when the burner is running!

! Note	All stated pressure values are only for reference. The actual values may vary depending on operating conditions.

Measuring nozzle pressure

1. Nozzle pressure at nominal capacity

Burner	Test point 1 (mbar)	Test point 1 (in.Wc)
450 M	28	11.2

4.15 Operating and display unit menu

Menu structure

Menus are divided into two user levels.

First user level is User, and it does not require password.

Second user level is Service. It is a password protected level for commissioning and maintenance personnel.

Operation

User can scroll through and change clock and counter settings for standard burner operation.

			Description
Operation			
	BoilerSetpoint		
		SetpointW1	Internal setting W1, °C / °F Internal setting W1, bar / PSI
		SetpointW2	Internal setting W2, °C / °F Internal setting W2, bar / PSI
	UserMaxLoad		
		MaxTmeMod	Max. load modulating
		MaxTmeStage	Max. load stage
	Fuel		Displaying and selecting the type of fuel
		CurrentFuel	Information about the type of fuel currently burnt (read only)
		FuelSelect	Fuel selection via DOU when fuel selector is set to "Internal"
	SetClock		Setting the display of date
		Date	
		TimeOfDay	
	HoursRun		Displaying the current hours run readings
		GasFiring	Hours run gas (selectable)

		OilStage1/Mod	Hours run oil stage 1 or modulating (selectable)
		OilStage2	Hours run oil stage 2 (selectable)
		OilStage3	Hours run oil stage 3 (selectable)
		TotalHoursReset	Hours run total (can be reset)
		TotalHours	Hours run total (read only)
		SystemOnPower	Hours run device under voltage (read only)
	StartCounter		Displaying the start counter readings
		GasStartCount	Number of startups gas, start counter (selectable)
		OilStartCount	Number of startups oil, start counter (selectable)
		TotalStartCountR	Total number of startups, start counter (can be reset)
		TotalStartCount	Total number of startups, start counter (read only)
	Fuel Meter		Displaying the current counter readings
		Curr Flow Rate	Current fuel throughput
		Volume Gas	Fuel volume gas (read only)
		Volume Oil	Fuel volume oil (read only)
		Volume Gas R	Fuel volume gas (resettable)
		Volume Oil R	Fuel volume oil (resettable)
		Reset Date Gas	Reset date fuel volume gas
		Reset Date Oil	Reset date fuel volume oil
	LockoutCounter		Total number of lockouts that occurred (read only)
	O2 Module		
		Actual O2 Value	Actual O2 value
		O2 Setpoint	O2 setpoint
		SupplyAirTemp	Supply air temperature in °C / °F
		FlueGas Temp	Flue gas temperature in °C / °F
		CombEfficiency	Combustion efficiency
	BurnerID		Identification of burner
	OptgModeSelect		Operating mode selection of AZL5... for serial port and eBus
		InterfacePC	Setting the serial port (RS-232) of the AZL5... to interface operation for PC tool
		GatewayBASon	Activating the eBus port

		GatewayBASoff	Deactivating the eBus port
		Type of Gateway	
	O2Ctrl activate	O2 trim controller activated/deactivated	

Manual operation

User can scroll through and change manual operation settings from operating and display unit.

			Description
ManualOperation			
	SetLoad		Target load setting manually, percent of maximum load (%)
	Autom/Manual/Off		Select manual or automatic operation
		Auto	Burner capacity adjusts automatically controlled by capacity controller according to boiler temperature or pressure
		Burner on	Burner on manual operation according to SetLoad
		Burner off	Burner stopped

Logging in to system

To ensure burner operation, some functions and actuator settings can be adjusted only by trained service personnel. Password is needed when logging into system.

Password protected menu levels:
- Burner control
- Ratio control
- Servomotors
- Frequency converter

Give password as follows:
1. Select Ss-password.
2. Give password.
3. Press **Enter**.

Burner Control menu level
- Times
- Configuration
- ProductID
- SW Version

Ratio Control menu level
- OilSettings
- Autom/Manual/Off
- Times
- ShutdownBehav
- ProgramStop

Servomotors
- Addressing
- DirectionRot
- SW Version
- ProductID

VSD Module
- Configuration
- Process Data
- ProductID
- SW Version

4.16 Adjusting operating and display unit settings

Scrolling menus

For scrolling and changing set values of the operating and display unit menu, use the four buttons on the panel.

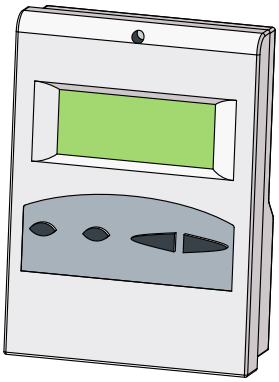

AZL ver. 4

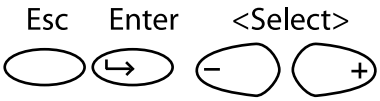

AZLNAPIT ver. 3

Scroll through the menus with the **Select -/+** buttons. Select the desired submenu by pressing **Enter**. Return to the higher menu level by pressing **Esc**.

Changing set values
1. Select **Params. & Display**.
2. Select the desired parameter.
3. Select a new parameter value using the **Select -/+** buttons.
4. Save the selected new value by pressing **Enter**.
5. Return to the menu by pressing **Esc**.

Adjusting display contrast
1. Press **Enter**.
2. Keep **Enter** pressed, and adjust the contrast using the **Select -/+** buttons.
3. Release **Enter** and return to the menu.

Activating safety check function

		Description
SafetyCheckFunct		
	LossFlameTest	Loss of flame test
	SLT test	Safety limit thermostat test

! Note	Burner lockout function is triggered by pressing the **Enter** and **Esc** buttons simultaneously.

4.17 Setting frequency converter parameters (WD200)

Parameters for frequency converter used for fan motor control must be set before the first start-up.

Initial state of parameters.
- Start/stop is controlled by burner control.
- Frequency converter alarm contact sends alarm data to burner control.
- Burner control controls output frequency with 0 / 4…20 mA signal.
- Remove control signal filtering and delays.
- Set acceleration and deceleration time at 2 s.
- Set the minimum frequency to 0 Hz.
- Set the maximum frequency to 105.2 % of the motor's nominal speed.

The inductive sensor detects the fan motor rotation speed from the motor axle. It generates 60°, 120° and 180° pulse intervals, from which rotation direction and speed are acquired.

CAUTION	Acquisition of speed is a safety function.

See frequency converter manual for instructions for setting parameters.

After frequency converter parameters are set, the rotation speed must be set to standard.

4.18 Frequency converter settings and standardization (WD200)

Standardize the rotation speed after setting the frequency converter parameters. Turn the control selection switch S1 to position 1. The control voltage is switched on to burner control.

Settings are in the following menu level:

Params. & Display				
↳	VSD Module			
	↳	Configuration		
		↳	Speed	
				Num Puls per R
			↳	Standardization
				StandardizedSp
				Setpoint Output
				Settling Time

Num Puls per R	Three pulses per round. Do not change the setting manually!
Standardization	Automatic fan maximum rotation speed test. Burner control should be in standby position when the test begins. Select *activated* from the menu to start the test. 1. Servomotor for air drives to pre-purge position. 2. Fan motor starts. 3. Burner control steers frequency converter setting to 95 %. When the fan reaches stable rotation speed, its value is set as *StandardizedSp* value in the menu. This value is equal to 100 % of fan rotation speed, 5 % is reserved for possible environmental condition change.
StandardizedSp	Do not change the setting manually! Perform standardization as described above.
SettlingTime	Rotation speed measured by frequency converter control. At stable output, the frequency measurement result stays almost the same. If the result varies notably, check the sensor operation.
Setpoint Output	Frequency converter control value can be set to 0…20 mA or 4…20 mA.

CAUTION

If automatic speed standardization is activated or standardized speed is changed manually, burner must be readjusted.

4.19 Checking O_2 module (WD200)

O_2 module, connected to burner control through CAN bus, can be connected with oxygen sensor.

When control voltage is switched on, and oxygen sensor is activated, heating is on and oxygen sensor is ready for operation.

Activate oxygen sensor during first start-up, and always after power failure, to start heating. Oxygen sensor is ready for operation when 700 °C / 1292 °F is reached. It takes approx. 10 min to reach the temperature.

Oxygen sensor is self testing. Self test monitors aging of the device, based on measurement cell resistance and response time. If measurement cell resistance and response time exceed 400Ω and 25 seconds, self test gives an alarm, and sensor must be changed.

O_2 module settings are in the following menu level:

				Description
Params. & Display				
↳	O2 Module			
	↳	Displayed Values		
		↳	Actual O2 Value	Actual O2 Value
			O2 Setpoint	O2 Setting
			SupplyAirTemp	Supply air temperature in °C / °F
			FlueGasTemp	Flue gas temperature °C / °F
			CombEfficiency	Combustion efficiency
			QGO SensorTemp	QCO-sensor temperature °C / °F
			QGO HeatingLoad	Control value of QGO... heating, 0,1%
			QGO Resistance	Internal resistance of QGO's Nernst cell

Self test is made at 23-intervals. Test requires constant O_2 level, for e.g. after pre-purge or on steady load. If constant O_2 level is not reached within 24 hours, burner control locks down operation load to reach constant O_2 level for next test. If burner is in stand by mode, test is made during next burner start-up.

CAUTION

Flue gases containing aggressive acids may strongly shorten oxygen sensor durability.

O_2 module can be connected with burner combustion air and flue gas temperature sensors. If sensors are connected, warning is displayed when flue gas temperature is too high, and combustion efficiency will be calculated and displayed.

! Note

Check that oxygen value and sensor temperature, heating efficiency and resistance values are displayed. If temperature sensors are connected and activated, values should be displayed.

4.20 Manual start-up and program stop in pre-purge position

Program stop

With burner control *ProgramStop* parameter burner start-up can be stopped in selected program phase, and servomotor position can be adjusted.

Pre-purge position	phase 24–34
Ignition position	phase 36
Transition 1	phase 44
Transition 2	phase 52
Post-purge	phase 72–78

Active program stop in phase 24.

Params & Display			
	Ratio Control		
		Program Stop	
			deactivate
			24 PrePurgP
			32 PreP FGR
			36 IgnitPos
			44 Interv 1
			52 Interv 2
			72 PostPPos
			76 PostPFGR

Manual start-up

Prerequisites:
- Frequency converter parameters are set and adjusted.
- Interlocking and failures are reset.
- Program phase is 12, *Stand by*.
- In heavy fuel oil use preheater temperature is sufficient.

Activate manual burner start-up from menu level *Autom/Manual/Off* by choosing *BurnerOn*:

ManualOperation		
	Autom/Manual/Off	
		Auto
		BurnerOn
		BurnerOff

Checking pre-purge position

Turn the burner control switch into position 2, *autom*. The burner starts if all prerequisites for start-up are fulfilled. Program phase changes12…20…21, etc. and stops at phase 24. A message *Special position reached* appears on the display.
The burner has reached the pre-purge position, and the servomotor positions can be modified if necessary. The final pre-purge setting is done when burner ignition load and curves are set.

Param. & Display					
↳	RatioControl				
	↳	GasSettings			
		↳	Special-Positions		
			↳	Pre-purgePos	
				↳	Pre-purgePos-Air
					Pre-purgePos-Aux1
					Pre-purgePos-Aux2
					Pre-purgePos-Aux3
					Pre-purgePos-VSD

When the curve point for full load is set, adapt this point and frequency converter settings for pre-purge position.

If servomotors do not drive full motion at full load curve point, burner start-up can be accelerated, because servomotor running times remain shorter.

Gas use
- at full load air amount pre-purge time is 20 s
- 50% air amount pre-purge time is at least 40 s
- 33% air amount pre-purge time is at least 60 s

Oil use
- Pre-purge minimum duration is set at 15 s, and air amount should be 30% of full load air amount. The servomotor settings should be the half of full load settings, and frequency converter setting should be at the middle of minimum and full load settings. Check from ratio curve that servomotor settings and frequency converter settings are over 30% of load settings.

! Note	If curve point setting for full load is changed, changes must be adapted to pre-purge position settings.

! Note	Pre-purge must ventilate combustion chamber to fresh air level.

! Note	If servomotor Aux 3 is in use, it does not move until phase 32, when program stop is changed to phase 32.

4.21 Ignition position

Set program stop at phase 36, *ignition*.

Burner control carries out automatic gas valve leak test during pre-purge, if:

- gas is selected as fuel, and it is the first start-up
- burner control has been unenergized
- it has been a long time from previous shutdown
- it is a start-up after safety shutdown or lockout reset

During standard stop, valve leak test is carried out before pre-purge period.

1. Servomotors drive to the ignition position. Set default values for ignition position. If oil is selected as fuel, check oil pump operating pressure.
2. When adjustments are set, select program stop at *44 Interval 1.* As program moves forward, spark ignites.
   Preignition phase begins. Preignition phase is longer in oil use, so that purging period is implemented at nozzle to ensure good ignition. After preignition phase fuel nozzle opens and flame ignites. Program progress is interrupted.
3. Optimize ignition position values.
   If gas is selected as fuel in program phase 44, only ignition gas flame burns and in program phase 52 main flame burns.
   If oil is selected as fuel ignition is direct, program phases have only different program phase durations. Ignition position setting can be adjusted in program stop phases 36, 44 and 52.
4. Select program stop *deactivated*. Burner shifts in to standard operation, phase 60, to set minimum load. Ignition position settings become first curve point settings for fuel/air ratio curve, that can be changed.

Set ignition position settings at the following menu level:

Params & Display					
↳	RatioControl				
	↳	GasSettings			
		↳	Special Positions		
			↳	IgnitionPos	
				↳	IgnitionPos- Gas
					IgnitionPos- Air
					IgnitionPos-Aux1
					IgnitionPos-Aux2
					IgnitionPos-Aux3
					IgnitionPos-VSD

! Note	Check combustion values of ignition capacity with flue gas analysis.

! Note	It is not recommended to set fan rotation speed under 70% at ignition position.

4.22 Setting ratio curve

Curve points

There can be 15 curve points at the maximum.

Set curve points in the following menu level:

Params. & Display				
↳	RatioControl			
	↳	GasSettings		
		↳	CurveSettings	
			↳	Point
				Manual

Creating curve point individually

Current servomotor positions in degrees, frequency converter control and capacity in percentages are shown at the right corner on display. Pointer is positioned at *Point*.

```
Point | Load    : 23.5
    : 3 | P-a   : 23.2
    O 2 | Air   : 41.6
  4.5 | Aux     : 33.3
```

Curve point 1 ver. 3

Press **Enter** to scroll through stored curve points.

```
Point | Load    : 23.5
    : 3 | P-a   : 23.2
    O 2 | Air   : 41.6
  4.5 | Aux     : 33.3
```

Curve point 2 ver. 3

The pointer is positioned at the colon below the *Point* text. After the colon, there is the running number of the stored curve point.

Curve points are stored according to capacity from smallest to biggest. Curve points can be added at any order. Scroll through curve points using the **Select -/+** buttons.

The unused curve point setting is *XXXX* and its running number is one number greater than last stored curve point running number.

If you want to set a new curve point, press **Enter**, when *XXXX* is displayed as set value.

The ignition position will automatically be the first ratio curve point, from which the burner minimum load point is adapted.

Editing individual curve point

To change the existing curve point:

1. Select the desired point and press **Enter**.
2. The pointer is positioned on *change?* below *Point*. The running number of the curve point to be changed is displayed after the colon.

```
P o i n t | P o i n t
      : 3 | c h a n g e ?
    M a n | d e l e t e ?
```

Curve point 3 ver. 3

3. Select desired value using the **Select -/+** buttons, and press **Enter**.
   - ***change*** changes the curve point settings
   - ***delete*** deletes the curve point

   Pointer positioned at *Load*.

```
P o i n t | L o a d     : 2 3 . 5
      : 3 | F u e l     : 2 3 . 2
      O 2 | A i r       : 4 1 . 6
    4 . 5 | A u x       : 3 3 . 3
```

Curve point 4 ver. 3

! Note	When the servomotors drive to position for set curve point, the display shows ">" instead of ":". When the servomotors have reached their positions, ":" returns to the display . Servomotors settings can be modified only when each servomotor has reached its position.

Operation can be interrupted by pressing **Esc**. The display returns to the initial state.

Capacity, servomotor and frequency converter settings can be scrolled through using the **Select -/+** buttons.

```
P o i n t | L o a d     : 2 3 . 5
      : 3 | F u e l     : 2 3 . 2
      O 2 | A i r       : 4 1 . 6
    4 . 5 | A u x       : 3 3 . 3
```

Curve point 5 ver. 3

Press **Enter** at the desired parameter.

```
P o i n t | L o a d     : 2 3 . 5
      : 3 | F u e l     : 2 3 . 2
      O 2 | A i r       : 4 1 . 6
    4 . 5 | A u x       : 3 3 . 3
```

Curve point 6 ver. 3

Change setting using the **Select -/+** buttons. Then servomotors drive to their new position. During that time the display shows ">" instead of ":". Confirm the change by pressing **Enter** or undo by pressing **Esc**. Then you return to the previous menu level.

The servomotor turning angle is 0…90° and they can be set at 0.1° accuracy. The capacity and frequency converter setting range is 0…100 % and they can be set at 0.1 % accuracy.

Adjust at point 1:

- burner minimum load, note ratio
- set fan rotation speed as small as possible, but not under 60%
- check combustion values with flue gas analysis
- check combustion flame
- set load value, point load is determined according to current fuel consumption as percentages from maximum load

In servomotors for air and frequency converter control, residual oxygen is adjusted as desired for each curve point.

When you have made changes, press **Esc**.

```
P o i n t
S t o r e - > E N T E R
C a n c e l - > E S C
```

Curve point 7 ver. 3

If you want to save curve point setting changes, press **Enter**. If you want to leave without saving changes, press **Esc**. Return to point where you can scroll through curve points. Return to menu using **Esc**.

Creating curve point manually by changing load

1. At the menu level *CurveSetting*, move the pointer to *Manually*.

```
P o i n t | L o a d    : 2 3 . 5
          | F u e l    : 2 3 . 2
    M a n | A i r      : 4 1 . 6
          | A u x :    : 3 3 . 3
```

Curve point 8 ver. 3

2. Press **Enter**, and use the **Select -/+** buttons to increase or decrease burner start capacity.

```
  O 2     | L o a d    : 2 3 . 5
    4 . 5 | F u e l    : 2 3 . 2
  M a n   | A i r      : 4 1 . 6
  2 3 . 5 | A u x      : 3 3 . 3
```

Curve point 9 ver. 3

3. Servomotors follow imaginary linear towards maximum or minimum load. Oxygen value can be monitored from display. When increasing load, monitor that combustion values do not increase to a hazardous level. If necessary, set curve point for interval by pressing **Enter**, and correct servomotor positions to return combustion values to normal level. Press **Esc** to return to the initial state. The curve point for maximum load will be set when fuel consumption for full load is reached.

! Note	Larger gas amount flow is reached when gas regulator valve angle is 62%. If gas consumption is not sufficient, check gas supply line control pressure and adjust if necessary.

! Note	If required oil consumption is not reached when oil regulator valve setting is 90°, check oil pump operating pressure, and adjust if necessary.

Adjust at full load curve point:
- burner capacity, note ratio
- set fan rotation speed as small as possible
- check combustion values with flue gas analysis
- check combustion flame
- set point load setting at 100%

When you have made the required changes, save the maximum load curve point.

! Note	If linear pressure for gas supply has been affected at maximum load curve point, check minimum point setting and adjust, if necessary.

! Note	If oil pump pressure has been changed at maximum load curve point, check minimum point setting, and adjust if necessary.

Middle points are set manually by decreasing load manually for example in 10% distances. Note that residual oxygen level is sufficiently over aired if the burner is equipped with O_2 trim control. Oxygen residual level is set 1% higher than the normal level. There can be 15 curve points at the maximum. Set at least 10 curve points for O_2 trim control.

! Note	Measure fuel consumption on every adjusting point so that the set of curves correspond to the genuine load situation.

! Note	Check combustion values of ignition capacity with flue gas analysis.

When curve points have been set, exit from curve setting menu level, and set the burner to operate on minimum load from manual operation menu level.

		Description
ManualOperation		
	SetLoad	
		Fixed load setting on manual operation, percentages of maximum load (%)

When exiting the **Params. & Display** menu level, changes can be stored to the operating and display unit memory.

Store changes by answering *yes*.

4.23 Activating FGR

! Note	Burner equipped with FGR can also be used without FGR. Whenever you change FGR on or off, you need to recheck fuel-air ratio curves.

FGR can be activated from: **Params. & Display**↲ **Flue gas recirc.** ↲ **FGR mode**↲ **TC autodeact**↲

It is recommended to commission the plant first without flue gas recirculation (FGR). Thus the fuel-air ratio control system is set as if the plant operated without the FGR function.

When all other settings have been made, create FGR curve points at ratio curve. The FGR function will become active after you have stored the curve point settings.

During the time the curve menu is in use, the state of the FGR function does not change. This means that the AUX3 for FGR is still at the **FGR closed** position until parameter setting is completed.

The parameters for FGR mode have been set at the factory. The commissioning personnel will adjust the settings at start-up if needed.

For further instructions, see the section *Setting FGR curve points*.

4.24 Setting FGR curve points

The FGR curve points are set at the fuel-air ratio curve. During the time the curve menu is in use, the state of the FGR function does not change. This means that if the AUX3 is still at the **ignition position** when setting parameters, it maintains the position until the curve setting is completed.

At this position, the recirculation duct remains in **ignition position**, and the AUX3 is marked with **#** on the screen. The position value of the AUX3 can be changed, but it will not follow the readjustment for that period of time. The changed value can also be stored.

If the AUX3 is not marked with **#** when setting parameters, it is already on the ratio control curve, and follows the readjustment of the position value immediately.

After time period or temperature is reached, AUX3 will be released and FGR curve can be made.

Temperature value can be changed from: **Params. & Display**↲ **Flue gas recirc.** ↲ **ThresholdFGR Gas**↲

Time period value can be changed from: **Params. & Display**↲ **Flue gas recirc.** ↲ **DelaytimeFGR Gas**↲

To create curve points:
1. Go to **Params. & Display**↲ **Ratio control** ↲ **Gas settings** ↲ **Curve Param** ↲
2. Select the required curve point and press ↲.
3. To edit the curve point, select **change**, and press ↲ to continue.

```
P o i n t | P o i n t
      : 3 | c h a n g e ?
    M a n | d e l e t e ?
```

Curve point 3 ver. 3

4. Select should the servomotors follow the adjustment during operation, **Followed** or **Not followed**.
5. On the next screen, press **Enter** to continue.

```
P o i n t | L o a d     : 2 3 . 5
      : 3 | F u e l     : 2 3 . 2
      O 2 | A i r       : 4 1 . 6
    4 . 5 | A u x 3     : 3 3 . 3
```

Curve point 3 FGR ver. 1

FGR temperature is stored to each curve point. Current FGR temperature can be viewed from display using +/- buttons.

Make sure capacity is stable and FGR tempererature is within the normal operation limits before storing curve point. This temperature is used to module the FGR valve during operation.

! Note	Changing curve settings may have an impact on the combustion settings. Check the servomotors regulating fuel and air. Readjust if needed.

You can save changes to the operating and display unit memory. Answer **yes** to the screen message that appears when leaving **Params. & Display** menu level.

For more detailed instructions on setting, monitoring, and editing curve points, see section *Setting ratio curve*.

4.25 Measuring FGR

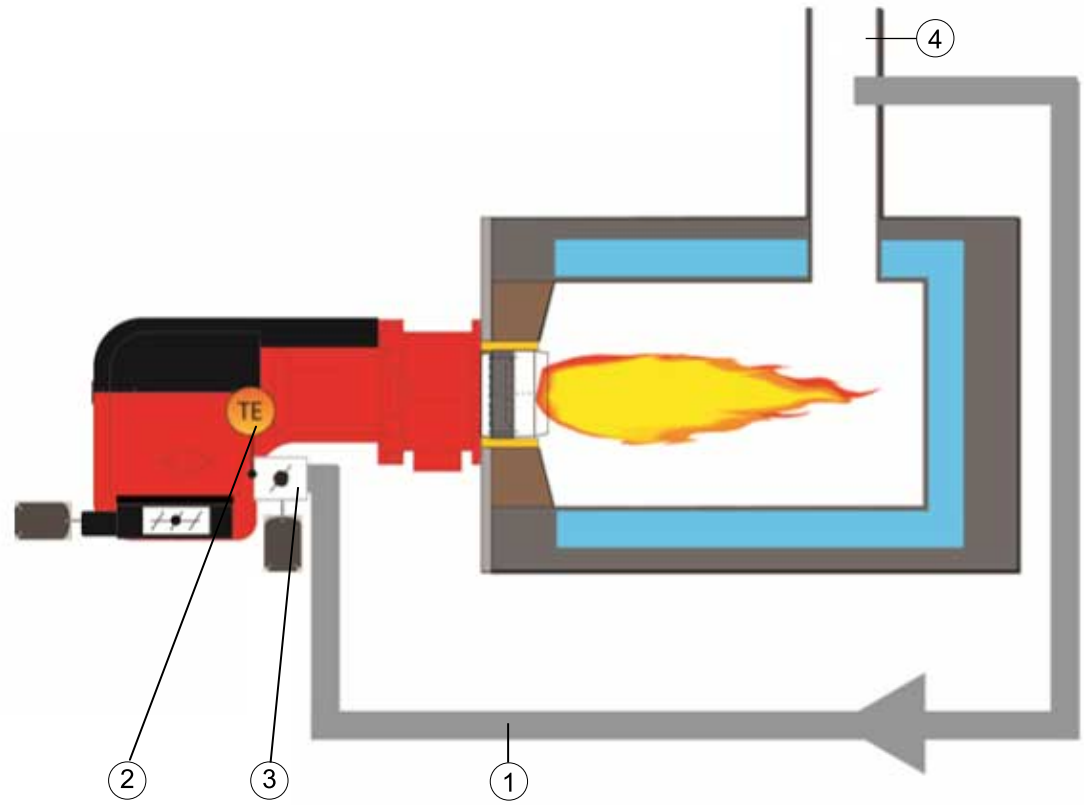

FGR principle monoblock ver. 1

Pos.	Item	Pos.	Item
1	FGR duct	3	FGR control valve
2	Temperature sensor	4	Measuring point of residual oxygen in flue gas

Recirculated flue gas amount is typically 10–20 % of the flue gas/combustion air mixture amount, depending on the application. Flue gas percentage is counted as follows:

FGR % = Flue gas amount recirculated m^3n / (Flue gas amount recirculated m^3n + combustion air amount in m^3n) %

To define flue gas percentage

1. First measure the amount of O_2 in the flue gas/combustion air mixture. The optimal measuring point is the burner wind box.
2. Measure the residual O_2 in flue gas.
3. Read the FGR percentage value in the diagram below.

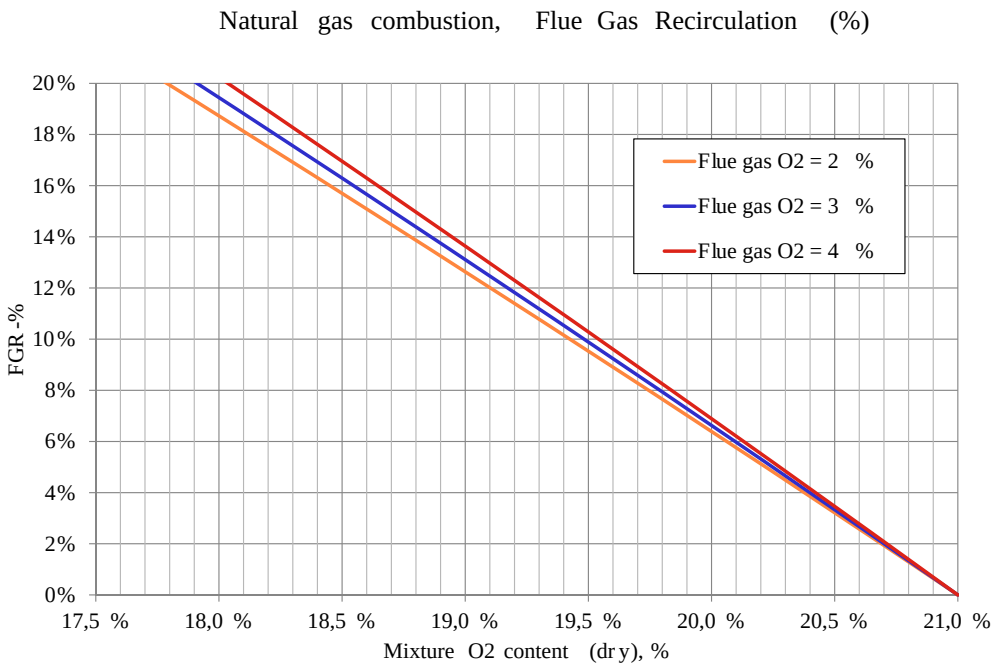

FGR natural gas ver. 1

FGR may cause unstable combustion. To avoid noise, vibration or other disturbance, the settings must always be defined for each burner separately.

4.26 Capacity range

Burner capacity range can be set as required at service level. The minimum capacity can be larger than the first curve point, and the maximum capacity can be larger than the last curve point. During start-up, the burner runs from ignition capacity to minimum capacity, and continues to normal operation. Ignition capacity can be smaller or larger than the first curve point capacity or it can be the same.

Set minimum and maximum capacity for each fuel individually from menu as follows:

					Description
Params. & Display					
	RatioControl				
		GasSettings			

			LoadLimits		
				MinLoadGas.	Minimum load "Low fire" (gas)
				MaxLoadGas	Maximum load "High fire" (gas)

On user level, maximum load can be set individually as follows:

			Description
Operation			
	User Maxload		
		User MaxLoadMod	Maximum load on modulating burner

4.27 O_2 min. value control (WD200)

O_2 ratio control can be set after setting the ratio curve.

> **CAUTION**
> Ratio curve air amount should be approx. 1 % higher than O_2 ratio control, so that environmental changes do not set residual oxygen level below O_2 trim control level.

Ratio curve should be as smooth as possible. If the curve has sharp breakpoints, set one additional point to smooth the curve. Even ratio curve improves O_2 ratio control. In dual-fuel burners, set the O_2 ratio control individually for both fuels, and they are not correlating.

Start O_2 ratio curve by setting O_2 min. value control.

O_2 min. value control

When setting for the first time *O2 monitor* should be deactivated with *man deact*.

Params. & Display				
	O2Contr/Guard			
		FuelSettings		
			OptgMode	
				man deact

Set O_2 min. value control as low as possible to ensure a high availability. O_2 min. value is between the permanently non-hazardous range and the potentially hazardous range. O_2 ratio curve is set at lowest 0.5 %–1 % above O_2 min. value, so during normal burner operation this level should not be reached.

CAUTION	Hazardous conditions must not permanently occur above or at O_2 min. value.

Maximum permitted values: CO = 4000 ppm, #2 on the Shell-Bacharach scale.

Values may vary depending on the type of plant.

CAUTION	If the ratio curves are changed later, min. value must also be readjusted.

O_2 min. value direct entry

1. Select *O2 Monitor* from menu as follows:

Params. & Display			
↳	O2Contr/Guard		
	↳	Fuel Settings	
		↳	O2 Monitor

2. If the limit values of a plant are known, O_2 min. values can be entered directly to curve points during burner operation.
   The first line shows curve point number. Scroll through points by pressing the **Select -/+** buttons. By pressing **Enter** twice, you can enter residual oxygen level as percentages to the second line. Use the **Select -/+** buttons.

```
P o i n t : 2
O 2 - M i n V a l u e :   1 . 2
P - A i r M a n       :   0 . 0
```

Point26 ver. 3

3. Accept the value by pressing **Enter**. Exit by pressing **Esc**.

Measuring O_2 min. values by reducing air

1. Select desired point from previous menu level by pressing the **Select -/+** buttons during burner operation. Press **Enter**.
2. Select third line *P-Air Man* by pressing the **Select -/+** buttons, and press **Enter**. The display changes as follows:

```
P o i n t : 2
A c t O 2 V a l u e   :   1 . 2
P - A i r M a n       : 1 2 . 9
```

Point27 ver. 3

3. Second line shows residual oxygen level. You can reduce air by pressing the **Select -/+** buttons. Larger value at *P-Air Man* means larger air throttle.

O_2 min. value surface is verified by throttling air and measuring CO level at the same time.

4. When desired oxygen level is reached, accept the value by pressing **Enter**. Exit by pressing **Esc**. Repeat for each curve point.

Start setting O_2 ratio control after O_2 min. value control is set.

4.28 Setting O_2 trim control (WD200)

O_2 min. value *O2Control* must be set first.

It is important that environmental conditions do not change when setting O_2 trim control.

CAUTION	If the curves are changed later, adjust also O_2 trim control.

The first curve point from which O_2 trim control begins is preset at curve point 2. That is the first point to be set for O_2 trim control. At this point burner control calculates low capacity settings for O_2 trim control. At lower capacity burner operates according to ratio curve, without O_2 trim control.

1. Select *O2 Control* from the following menu level:

Params. & Display			
↳	O2Contr/Guard		
	↳	Fuel Settings	
		↳	O2 Control

2. The first O_2 trim control point is curve point 2.
   At lower capacity burner operates according to ratio curve.
   Confirm the selection by pressing **Enter**. The burner runs to point 2 capacity.

```
P o i n t : 2
O 2 - R a t i o C o n  : X X X X
O 2 S e t p o i n t    : X X X X
S t a n d V a l        : X X X X
```

Point2 ver. 3

3. The display changes. The second line *O2ratioCon* shows current residual oxygen level. Wait until the level stabilizes, and corresponds with ratio curve level. The burner control uses this level when calculating O_2 trim control settings.
   Confirm the selection by pressing **Enter**.

```
P o i n t : 2
O 2 - R a t i o C o n    : 5 . 4
I f V a l u e S t a b l e
C o n t i n u e W E n t e r
```

Point22 ver. 3

4. Display the changes. The third line shows the current residual oxygen level. The pointer is on *StandardVal*. Reduce the air by pressing the **Select -/+** buttons, if necessary. Larger level at this point, means larger air throttle. When desired oxygen level is reached, press **Enter**.

```
P o i n t : 2
O 2 - R a t i o C o n :   5 . 2
O 2 - S e t p o i n t :   2 . 0
S t a n d V a l       : 1 2 . 3
```

Point23 ver. 3

5. Display the changes.

   Save or reject by pressing **Enter**.

```
P o i n t
S t o r e - > E N T E R
C a n c e l - > E S C
```

Point24 ver. 3

At curve point 2, and at the highest curve point, the burner control calculates PI parameters, and time delays for O_2 monitor by driving the burner back to ratio curve. After that the display returns to initial state.
Select next curve points from the menu by pressing the **Select -/+** buttons, and set O_2 setpoints from them. If flue gas speed in ratio curve point 2 is too low, O_2 monitoring set value calculation does not succeed. The burner control notifies this in the operating and display unit.
O_2 monitoring first point can be set later using the parameter *Adapt.Pointsmall*.

```
Delay time is
measured
O2setpoint : 2.5
```

Point25 ver. 3

4.29 O_2 trim control operating mode (WD200)

Select the suitable O_2 trim control operating mode as follows:

Params. & Display				
↳	O2Contr/Guard			
	↳	FuelSettings		
		↳	OptgMode	
			↳	auto deact
				man deact
				O2 Limiter
				O2 Control
				conAutoDeac

O_2 trim control operating modes

man deact	Use this setting when creating O_2 ratio curve. Both *O2Limiter* and *O2Control* are deactivated. Burner operates according to parameterized ratio curves.
O2 Limiter	Only *O2Limiter* is active. Oxygen sensor must have reached its operating temperature. If not, start-up will be prevented. If oxygen sensor or O_2 module causes a failure during burner operation, burner stops, tries to restart or lockout occurs.
O2 Control	Both *O2Limiter* and *O2Control* are active. Oxygen sensor must have reached its operating temperature. If not, start-up will be prevented. If oxygen sensor or O_2 module causes a failure during burner operation, burner stops, tries to restart or lockout occurs.
conAutoDeac	Use this setting during normal operation. Both *O2Limiter* and *O2Control* are active. Burner starts, though oxygen sensor has not reached its operating temperature. Burner operates along parameterized ratio curves. When oxygen sensor has reached its operating temperature and sensor test has been successfully completed, both *O2Limiter* and *O2Control* are active. If oxygen sensor or O_2 module cause failure during burner operation, both *O2Limiter* and *O2Control* are deactivated. Burner operates along parameterized ratio curves. O_2 trim control status in operating and display unit is automatically set to *auto deact*, and error code is displayed. Error code is maintained until O_2 trim control is manually deactivated or activated.
auto deact	O_2 trim control has automatically been deactivated and burner operates along parameterized ratio curves. **Do not select this option!**

! Note	If O_2 trim has been automatically deactivated, then you can reactivate it from: **Operation**↲ **O2Ctrl Activate** ↲ **Activate**↲.

4.30 O_2 trim control load limitation (WD200)

Select *O2CtrlThreshold* from the operating and display unit menu as follows:

Params. & Display			
	O2Contr/Guard		
		Fuel settings	
			O2CtrlThreshold
			Apadt.Point small
			Type of Fuel
			Fuel user def

If load drops below this limit, the burner operates along parameterized ratio curves without O_2 trim control. Set load limitation after setting O_2 trim control ratio curve. Load limitation is usually curve point 2 load from basic parameterized ratio curve.

4.31 O_2 trim control when load changes (WD200)

When load changes under unfavourable setting conditions, the actual O_2 value will drop below the minimum limit. To prevent this, parameterize an increase of the O_2 value during capacity change *O2 OffsetGas/Oil*.

Params. & Display			
	O2Contr/Guard		
		FuelSettings	
			Type ofAir-Change
			O2 OffsetGas/Oil
			LoadCtrlSuspend
			FilterTimeLoad

Parameters

Type ofAirChange	Impact of air density change on O_2 value • *like P air*, gas use • *like theory*, oil use
O2 OffsetGas/Oil	O_2 trim control setting increase during capacity control. Presetting 0,5 %.
LoadCtrlSuspend	Limit of load difference when O_2 trim controller will be locked. Presetting 5%.
FilterTimeLoad	Delay time of previous parameter, 5 => 5 x τ, presetting.

4.32 Setting capacity controller operating mode

1. Set boiler temperature set value W1 for capacity controller.

			Description
Operation			
	BoilerSetpoint		
		SetpointW1	Internal setpoint W1, °C / °F Internal setpoint W1, bar / PSI

2. Select burner start-up manually by activating *Autom/Manual/Off* option *Autom*. Preset value from burner control is IntLC.

ManualOperation		
	Autom/Manual/Off	
		Autom Burner on Burner off

3. Burner control capacity controller keeps boiler temperature or pressure constant by modulating burner capacity as necessary. Capacity controller shuts down and restarts the burner if necessary. Select capacity controller control parameters from the menu as follows:

Params. & Display			
	Configuration		
		LC_OptgMode	
			ExtLC X5-03 IntLC IntLC Bus IntLC X62 ExtLC X62 ExtLC Bus

Capacity controller operating modes:

ExtLC X5-03	External capacity controller with contactors.
IntLC	Internal burner control capacity controller. Internal set value W1 in use. Can be changed to internal set values W1-W2 using contactors.
IntLC Bus	Internal burner control capacity controller. Set value for burner control through Modbus or eBus.
IntLC X62	Internal burner control capacity controller. Set value for burner control through analog signal. Can be changed to internal set value W1 using contactors.
ExtLC X62	External capacity control with analog signal.
ExtLC Bus	External capacity control using Modbus or eBus.

4.33 Setting capacity controller parameters

Standard parameter setting

Capacity controller contains 5 standard parameter settings that can be selected and activated, depending on characteristics of controlled process.

Params. & Display					
	Load- Controller				
		Controller-Param			
			ContrlParam-List		
				Standard-Param	
					Adaption
					very fast
					fast
					normal
					slow
					very slow

Standard parameters are listed in the following table:

	P [%]	**I [s]**	**D [s]**
Very fast	42.5	68	12
Fast	14.5	77	14
Normal	6.4	136	24
Slow	4.7	250	44
Very slow	3.4	273	48

P = Proportional band

I = Integral action time

D = Derivative action time

Setting parameters individually

PID parameters can also be set individually according to the following value range:

- *P-Part (Xp)* 2…500% of the measurement range
- *I-Part (Tn)* 0…2000s, 0=no I part
- *D-Part (Tv)* 0…1000s, 0=no D part

Params. & Display				
	LoadController			
		ControllerParam		
			ContrlParamList	

				P -Part (Xp)
				I -Part (Tn)
				D -Part (Tv)

- By increasing the proportional band, the temperature/pressure deviation is lowered. Using too great a proportion will result in temperature/pressure fluctuation.
- The integral action time defines the time that it takes for the temperature/pressure deviation to return back to zero.
- The derivative action time speeds up control. Set the P and I parts while the value for the D part is 0.
- Using too great a derivative action time will result in temperature/pressure fluctuation.

Parameter adaptation

During adaptation, the burner control calculates PID parameters for process which is controlled based on the characteristics.

Params. & Display			
	LoadController		
		Adaption	
			StartAdaption
			AdaptionLoad

The burner and boiler are ready for 10 min. run, where boiler temperature or pressure is dropped below 5 % set value, and then run with full load. This occurs automatically according to the following diagram. Boiler load should stay constant throughout adaptation.

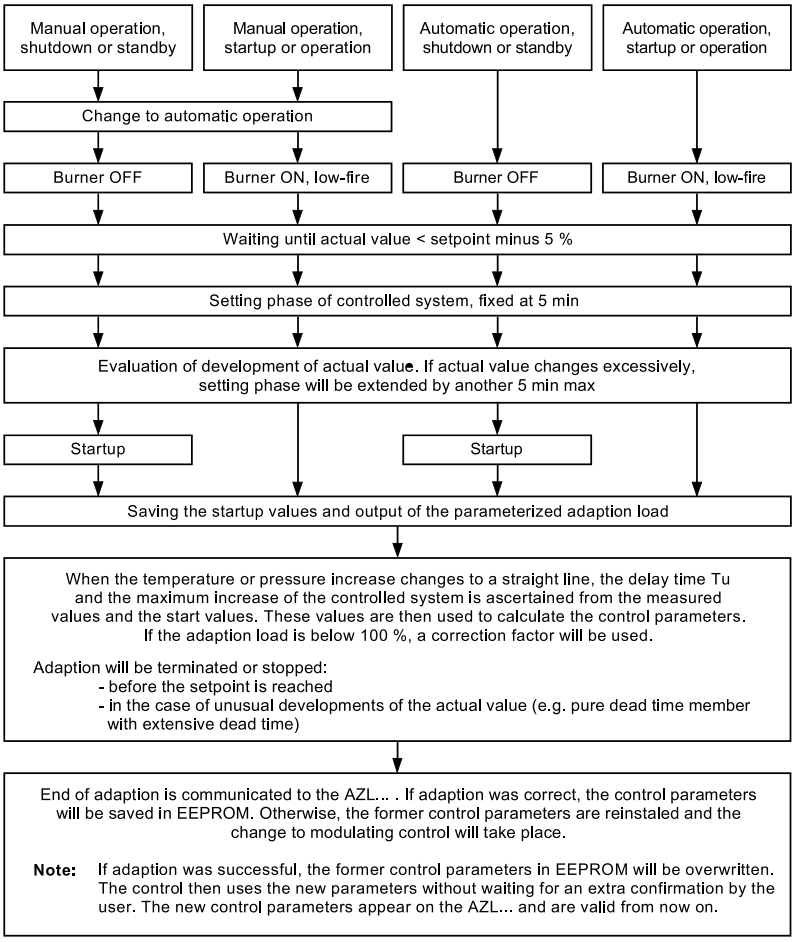

Flow chart_WD capacity ver. 2

! Note	O_2 trim control must not be active during adaptation.

In the WD200 system, deactivate O_2 trim control from the operating and display unit menu:

Operation		
	O2Ctrl activate	
		deactivated
		activated

Select *StartAdaption*.

Parameter evaluation

Capacity control does not cause variation in boiler temperature or pressure with optimum PID parameters.

When changing the setting, boiler temperature or pressure should stabilize without going up and down. Pressure and temperature must not go under or exceed set values.

Practical value for Tn / Tv = 4…6.

Examples of typical incorrect settings, and the optimal setting to change the set value:

Xp too low

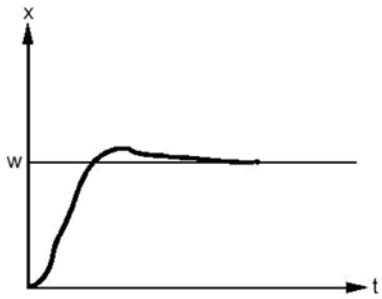

Xp too high

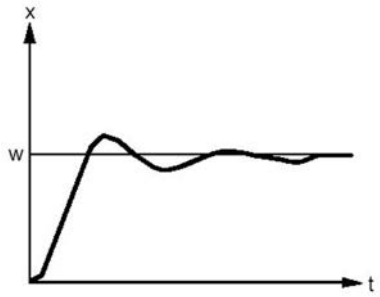

Tn and Tv too low

Tn and Tv too high

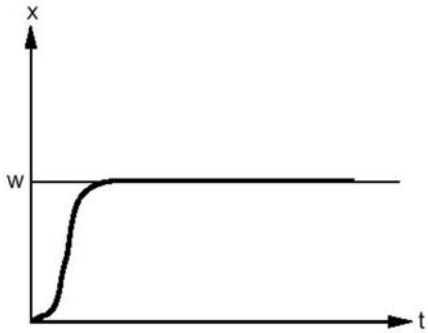

Optimum setting

If load control is not completely stabilized, but fluctuates continuously near the setpoint value, the following parameters can be used to control this.

! Note	Always make sure that the PID parameters are correctly set before using the following parameters. A noticeable fluctuation of load near the set value indicates poor setting of PID parameters.

Params. & Display			
↳	LoadController		
	↳	ControllerParam	
		↳	MinActuatorStep
			SW_FilterTimeCon

MinActuatorStep is the minimum possible actuator step. This affects the load controller accuracy but may stabilize its action. If the value for this parameter is too high, the load control becomes unstable. The factory settings is 1%.

SW_FilterTimeCon. can be used to delay the internal load controller. If the value for this parameter is too high, the internal load controller becomes unstable. The factory setting is 3s.

4.34 Capacity controller on/off

If temperature or pressure has been given a set value, burner start-up and shut down limits are percentages of the set value. Calculate switching points according to following example:

	Setting	70 °C 158 °F
Mod_On	Burner start	-10 % (=7 °C) 70 – 7 = 63 °C -10 % (=44.6 °F) 158 – 44.6 = 113.4 °F
Mod_Off	Burner shutdown	+5 % (=3,5 °C) 70 + 3,5 = 73,5 °C +5 % (=38.3 °F) 158 + 38.3 = 196.3 °F
Mod_On	is possible to set between	–50…+50 %
Mod_Off	is possible to set between	0…+50 %

Params. & Display			
	LoadController		
		ControllerParam	
			Mod_On
			Mod_OFF

Example running period.

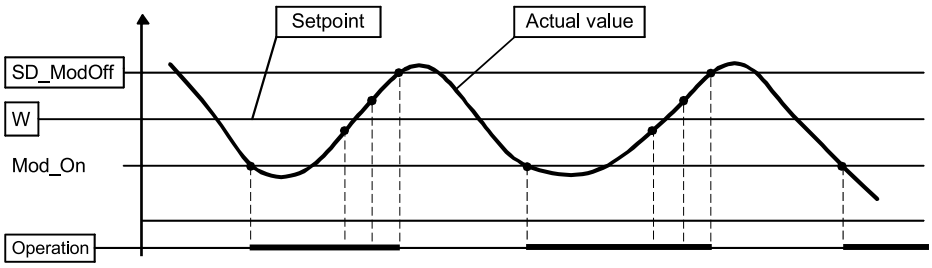

KAYNTIJAKSO ver. 2

4.35 Boiler temperature limiting with burner control

Boiler temperature can be limited with burner control. It can be implemented with the same sensor used for temperature control, or with a separate sensor. When pressure control is selected, temperature limiter is not in use.

If limiter temperature switch-on point is reached, burner shuts down. Burner restarts when temperature limiter is reset.

Example:

TL_ThresholdOff	Limiter switch-on point	80 °C 176 °F
TL_SwiDiff_On	Temperature difference percentages	-10 % (=8 °C) -10 % (46.4 °F)
	Limiter reset temperature	72 °C 161.6 °F

				Description
Params. & Display				
↳	LoadController			
	↳	TempLimiter		
		↳	TL_ThreshOff	Temperature limiter OFF threshold, °C / °F
			TL_SD_On	Temperature limiter switching differential ON

4.36 Cold start thermal shock protection

Cold start thermal shock protection protects the boiler from thermal stress if the boiler has cooled down. The burner starts with small load and the load increases as the boiler warms up. Without protection, the burner runs straight to full load.

If boiler temperature or pressure has dropped under set value *ThresholdOn*, the burner starts with minimum load. The load depends on two factors:

1. If the set value does not reach the set step within the maximum time, the load will be increased by one stage step.
2. If the set value has reached the set step before the maximum time has elapsed, the load increases by one stage step.

The menu shows values used in the chart example.

				Example, Set value 10 bar
Params. & Display				
↳	LoadController			
	↳	ColdStart		
		↳	ColdStartOn	activated
			ThresholdOn	40% of set value
			StageLoad	15% load step
			StageSetp_Mod	10% of set value
			StageSetp_Stage	
			MaxTmeMod	5 minutes
			MaxTmeStage	
			ThresholdOff	80% of set value
			AdditionalSens	
			Setp AddSensor	
			Release Stages	

Cold start thermal protection operation example.

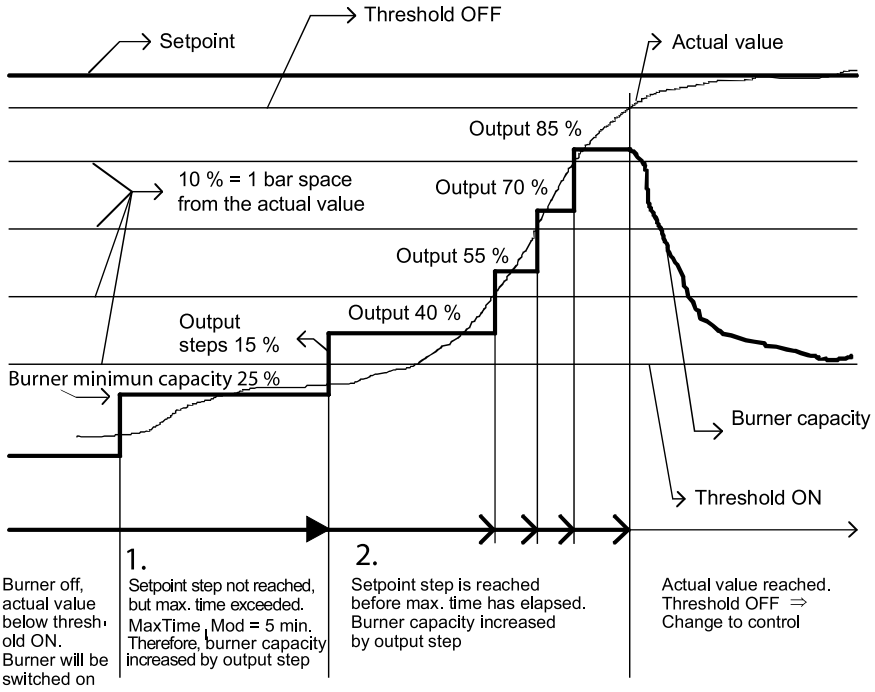

KYLMAKAYNNISTYS ver. 3

4.37 Measuring flue gas and combustion air temperature (WD200)

Flue gas and combustion air temperature measuring sensor can be connected to O_2 module.

Alarm for high flue gas temperature can be set individually for both fuels.

Select the sensor type and set the alarm threshold from the menu as follows:

Params. & Display			
	O2 Module		
		Configuration	
			O2 Sensor
			SupAirTempSens
			FlueGasTempSens
			MaxTempFlGasGas
			MaxTempFlGasOil

4.38 Activating O_2 trim control (WD200)

At the end of commissioning activate O_2 trim control from the display and operation unit menu.

Operation		
	O2Ctrl activate	
		deactivated activated

4.39 Backing up parameters

1. Start backing up parameters by selecting following from the display and operating unit:

Updating		
	ParamBackup	
		BackupInfo
		LMV5x –> AZL
		AZL –> LMV5x

2. Start backing up by pressing **Enter**.
3. Parameter backup is done, when text *Parameters saved* appears on display.

5 Operation

5.1 Burner operation

WiseDrive 100 / 200

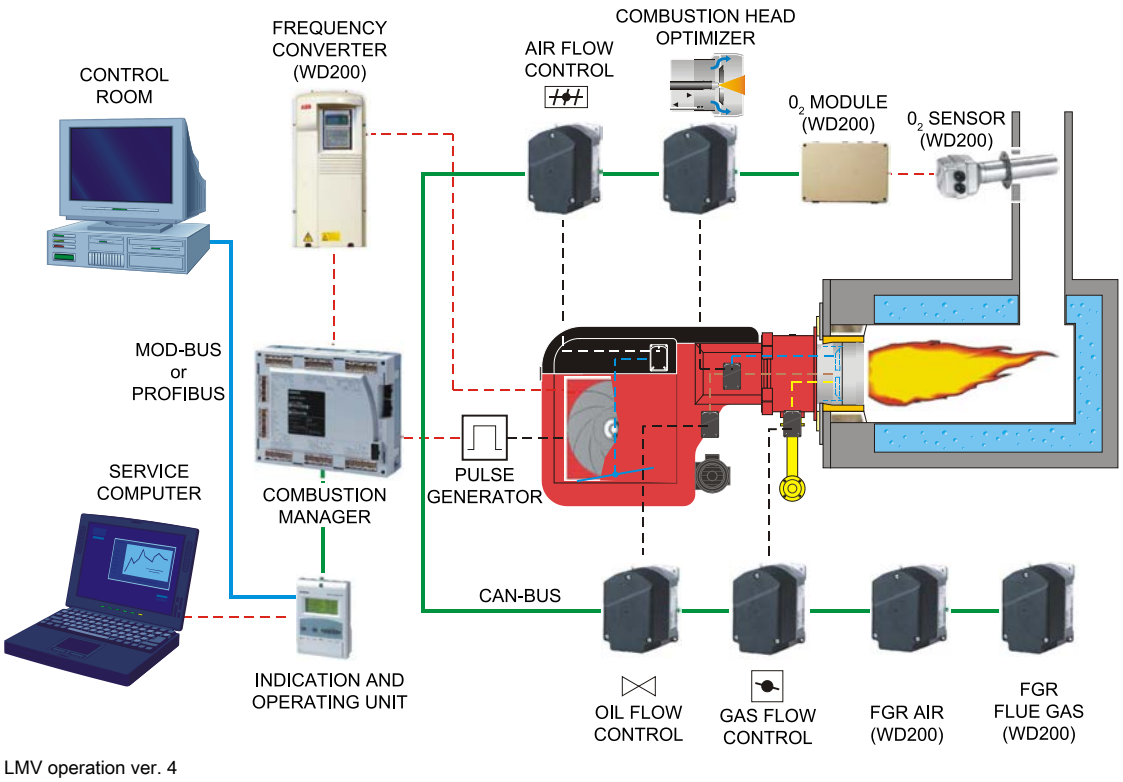

The assembly may vary depending on the scope of delivery.

In the WiseDrive system, burner operation is controlled and supervised by an integrated burner control.

In the WD200 system, the burner can be equipped with O_2 module to increase combustion efficiency.

The burner control adjusts fuel and air ratio.

The system includes an operating and display unit for local use.

To enable continuous operation, the WiseDrive system uses components designed specifically for this system. The system supervises components related to safety functions with continuous self-testing.

Burner control

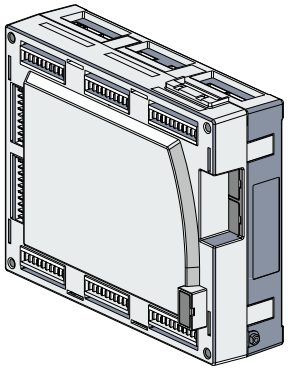

LMV5 ver. 3

Burner controller is a microprocessor-based burner control and safety system.
Burner control can have the following features:

- Burner control and safety functions
- Electronic fuel/air ratio
- Gas valve proving
- Capacity controller
- Fan frequency converter control (WD200)
- Residual oxygen control (WD200)
- Boiler cold start thermal shock protection
- Fuel flow meter (WD200)
- Burner efficiency measuring (WD200)
- Start-up and running time counters
- Fault and lockout history
- Real-time clock
- Bus interface

CAUTION

Burner control is a safety device. Do not open it or interfere with it.

Servomotors

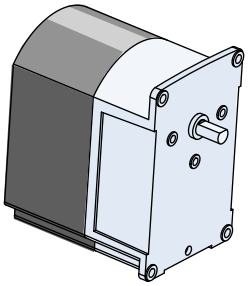

SW00017 ver. 3

Servomotors are used to drive fuel regulators and other actuating devices.

CAUTION

- Electrostatic dischargecan damage servomotor.
- Do not dismount servomotor. Do not interfere with or modify unit or equipment connected to it. It may damage servomotor, and change burner settings.
- Do not use servomotor that might be damaged.

Combustion air

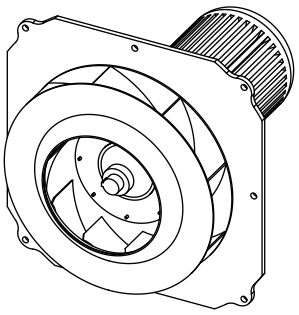

Fan group 4 ver. 3

Combustion air provides the needed air pressure and volume for efficient combustion.
In the WD200 system, the fan motor can be fitted with a variable speed drive. The variable speed drive adjusts air pressure according to burner's capacity by controlling the fan speed.

Operating and display unit

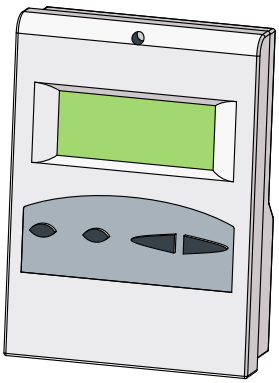

AZL ver. 4

The WiseDrive system operating and display unit is used for monitoring and adjusting settings.
The menu is available in several languages.
The operating and display unit has an internal memory backed up by a battery. The memory stores the burner control parameters. Battery durability is approximately 10 years.

O_2 module (WD200)

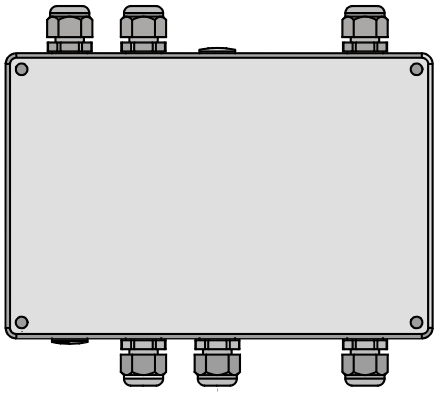

PLL52 ver. 3

O_2 module and oxygen sensor measure the residual oxygen content of the flue gases. Burner control uses the measurements to monitor and optimise the combustion process. Flue gas and combustion air temperature sensors can be connected to the system to measure efficiency.

Oxygen sensor (WD200)

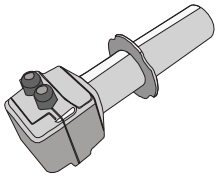

QG020 ver. 3

Oxygen sensor measures the amount of residual oxygen from flue gas. The sensor is a ceramic zirconium dioxide cell and self-testing.

Flame detector

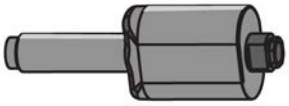

QRI ver. 3

QRI is a flame detector for use with gas, oil and other flames that emit infrared light. Flame signal intensity can be monitored on display. Flame detector is equipped with self-test function and is suitable for continuous use.

5.2 General description of burner operation

! Note	Burner has to be connected to the oil circulating system according to site diagram.

Burner start-up, pre-purge, ignition

Prepurge starts with full capacity and needed amount of air. After prepurge servomotors turn to ignition capacity position and solenoid valves open. Oil spray is generated by oil pump pressure of the burner and enters the nozzle valve control circuit and nozzle. Nozzle is controlled by oil pressure in control circuit.

Oil spray from nozzle ignites by spark between ignition electrodes. The oil amount to be burnt is adjusted by oil regulator valve. Adjustment is made by throttling the oil return flow. At minimum capacity the oil regulator valve is open and at maximum capacity it is closed.

Burner operation

During burner operation capacity controller controls the servomotor. Servomotor in turn controls oil regulator valve and air dampers according to the boiler capacity demand. If burner stops, solenoid valves close and oil pressure of the control circuit is released from nozzle valve.

Burner shutdown

If burner minimum load exceeds the capacity demand of the boiler, burner shuts down and solenoid valves close.

If burner shuts down, solenoid valves (NC) close and control flow oil pressure releases from nozzle valve. Nozzle valve spring power closes nozzle needle valve and oil supply from nozzle.

Post-purge

The post-purge position of servomotors is adjusted according to the fuel type. After burner shutdown, servomotors drive to their post-purge positions. The fuel valves are closed. The combustion air fan is running, to clear the combustion chamber of unburnt fuel and products of combustion.

Burner start-up, pre-purge, ignition

During pre-purge, the burner fan ventilates the boiler and smoke flue. At the time, the double solenoid valve is closed. The fan manages to create a full air pressure before gas inlet. Air in the boiler and in the smoke flue will be circulated, which reduces the pressure, developing in combustion chamber during flame ignition.

After the pre-purge, the servomotors run to the ignition position, the ignition begins, and the double solenoid valve opens. Gas releases to the nozzle, and ignites by spark. Ignition ends after time determined by the burner control. The flame burns with set ignition load.

Burner operation

During burner operation, the capacity controller controls the burner control, which controls the servomotors. Servomotors adjust the gas regulator valve and air dampers between partial load and full load according to the capacity demand.

Burner shutdown

If burner minimum load exceeds the capacity demand of the boiler, burner shuts down and gas valves close.

Gas valve proving

Gas valve proving is carried out with a switch, that tests double solenoid valve and possible ignition gas valve tightness according to burner control program phase. Pressure switch carries out gas valve testing during controlled shutdown or during next prepurge period.

Post-purge

The post-purge position of servomotors is adjusted according to the fuel type. After burner shutdown, servomotors drive to their post-purge positions. The fuel valves are closed. The combustion air fan is running, to clear the combustion chamber of unburnt fuel and products of combustion.

5.3 Gas valve proving

Valve proving system is carried out with pressure switch that supervises piping section between valves. Burner control opens and closes gas valves during proving according to the programmed times. If leak is detected, gas valve proving function prevents gas valves from opening, and ignition from beginning. Safety shutdown activates. Burner control display shows the leaking valve.

Gas valve proving is carried out during normal burner shutdown, between phases 62 and 70. If the previous shutdown was not normal, for example, because lockout or burner control has been de-energized, it takes place during next start-up sequence, during pre-purge period, between phases 30 and 32.

Valve proving sequence phases are 80... 83.

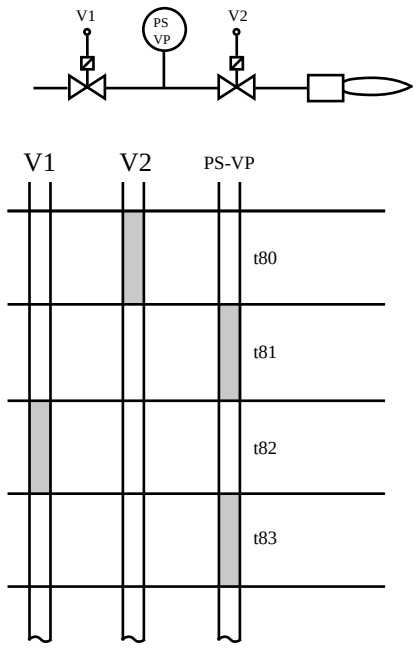

TIIVIYDENTESTAUSPAINEKYTK ver. 3

Phase 80: Evacuate. Gas valve V2 on burner side is opened to bring test space to atmospheric pressure. Valve V1 on gas network side stays closed.

Phase 81: Atmospheric pressure test. Both gas valves are closed. Gas pressure may not exceed the preset limit of the valve proving pressure switch during test.

Phase 82: Fill. Gas train is filled by opening gas valve V1 on gas network side. Gas valve V2 on burner side is closed.

Phase 83: Pressure test. Both gas valves are closed. Gas pressure may not drop below the preset limit of the pressure switch valve proving pressure switch during test.

5.4 Legend to time sequence diagrams

Phases:

00	Lockout phase	50	2nd safety time
01	Safety phase	52	Interval 2 (ti2)
10	Homerun	54	Low-fire position
12	Standby (stationary)	60	Operation 1 (stationary)
21	Shutoff valve ON (start release)	62	Operation 2 Low-fire position
22	Fan motor ON	70	Post-combustion time
24	Prepurge position	72	Postpurge position

30	Prepurge time (tv1)	74	Postpurge time (tn1)
32	Prepurge time (tv)	76	Flue gas recirculation postpurge position
34	Prepurge time (tv2) (flue gas recirculation ARF)	78	Postpurge time (tn3)
36	Ignition position	79	Direct start
38	Preignition (Z) ON	80	Valve proving evacuating time
40	Burner valve ON	81	Valve proving time atmospheric pressure
42	Ignition OFF	82	Valve proving filling time
44	Interval 1 (ti1)	83	Valve proving time gas pressure

Times:

t0	Postpurge lockout position	t78	Postpurge time 3 gas / oil (tn3)
t01	Max. time safety phase	t80	Valve proving evacuate time
t10	Min. time home run	t81	Valve proving time atmospheric pressure
t21	Min. time start release	t82	Valve proving filling time
t22	Fan running time	t83	Valve proving time gas pressure
t30	Prepurge time part 1	tmn1	Min. time extraneous light test (5 s) after skipping prepurge
t34	Prepurge time part 3	tmx1	Max. damper running time
t36	Min. ON time oil pump	tmx2	Max. time startup release
t38	Preignition time gas/oil	tmx3	Max. time circulation heavy oil
t42	Preignition time OFF	tn	Postpurge time
t44	Interval 1 gas/oil	TSA1	First safety time gas/oil
t62	Max. time low-fire	TSA2	Second safety time gas/oil
t70	Post-combustion time	tv	Prepurge time gas/oil
t74	Postpurge time 1 gas / oil (tn1)		

Abbreviations:

AL	Alarm	PV	Pilot valve
ARF	FGR = flue gas recirculation	R	Temperature or pressure controller ON (internal + external)
CPI	Closed Position Indicator	RP	No-load position
DP	Pressure switch	SK	Safety loop (safety limit thermostat, water shortage)
DW-DK	Pressure switch + valve proving	SP	Setpoint position
DWmin	Pressure switch-min	SR	Safety relay internal
DWmax	Pressure switch-max	STB	Safety limit thermostat
FS	Flame signal	SV	Shutoff valve
GSK	Fan contactor contact	TW	Temperature switch internal
KL	Low-fire position	V1	Fuel valve 1
LK	Air damper	V2	Fuel valve 2
LP	Air pressure switch	V3	Fuel valve 3
M	Fan motor	VL	Prepurge position
N	Postpurge	Z	Ignition
NL	Postpurge position	ZL	Ignition load position

Symbols:

Signal ON	Signal OFF	Next phase	
		01	00, repetition = 0 12, repetition > 0
		Parameter *NormalDirectstart* Checking with controller ON Deviation → 10 No repetition decrement	
		10	
		70	
		Without valve proving → 70 With valve proving → 80	
		62	
		Stop, up to phase maximum time → 01	
0...3 s		Stop, up to phase maximum time → 10	
0...3 s	0...30 s	01	00, repetition = 0 12, repetition > 0

	Output OFF / input Irrelevant
	Output ON / input ON

	Permissible positioning range
	In Standby: actuator can move within the permissible positioning range, but is always driven to the home position. It has to be in the home position before changing the phase.

0°	Position as supplied (0°)
90°	Actuator fully open (90°)

Indices:

1)	Param.:	*ValveProvingType*→ Valve proving takes place between phases 30/32 and/or phases 60/70
2)	Param.:	Short / long preignition time for oil only Short / long oil pump – ON – time
3)		Delayed shutdown within safety time
5)	Param.:	Normal / direct startup Normal startup → sequential phase = 10 Direct startup → sequential phase = 79 (when R = ON)
6)		Sequential phase = 24
7)		Only with valve proving during startup
8)	Param.:	With/without alarm on prevention of startup
9)	Param.:	With continuous purge the shown output signals are inverted
10)		Fan controlled as before Postpurge in lockout position = *PostpurgeLockout*
11)	Param.:	With / without extraneous light test in STANDBY
12)		With valve proving during startup phase 10

13)	Param.:	Normal / continuous purge Normal purge: Checking for OFF in 10 and 12, stop to phase-max time → 01 Continuous purge: Checking for ON in 10 and 12, stop up to phase-max time → 01
14)	Param.:	*OilPressureMin*, *act from ts* → no check before first safety time (LO, HO) or second safety time (LOgp, HOgp)
15)	Param.:	*GasPressureMin*, *deact xOGP*→ pressure switch-min (Pmin) can be deactivated for oil programs with gas pilot
16)	Param.:	*OilPumpCoupling:* *direct_coupl* → shutoff valve - oil to be connected to output *Oil pump / magnetic clutch.* Output is active when fan is on and for another 15 s after fan is switched off.
18)	Param.:	*Alarm act / deact*, *deactivated*→ alarm output can temporarily be deactivated (for current error only)
19)	Param.:	Only LMV50... and LMV52...: Continuous pilot gas/oil: Activated → pilot valve is also activated in operation
20)	Param.:	Only LMV50... and LMV52...: Extraneous light, pilot phase, operating phase gas/oil → Separate flame supervision possible
22)	Param.:	Depending on parameter *StartPoint Op*
23)	Param.:	Depending on parameter *DriveLowfire Gas* or *DriveLowfire Oil*
24)	Param.:	Depending on parameter *HeavyOilDirStart*
25)	Param.:	Air pressure test = deactivated in standby → irrelevant in phase 10 and 12
26)	Param.:	Long postpurge time tn3 (*PostpurgeT3long*)
27)	Param.:	Only LMV50... → cooling function in standby
28)	Param.:	Continuous purge

k)	Heavy oil direct start
l)	Restricted startup behavior
n)	Restricted safety loop

5.5 Time sequence diagram, gas use

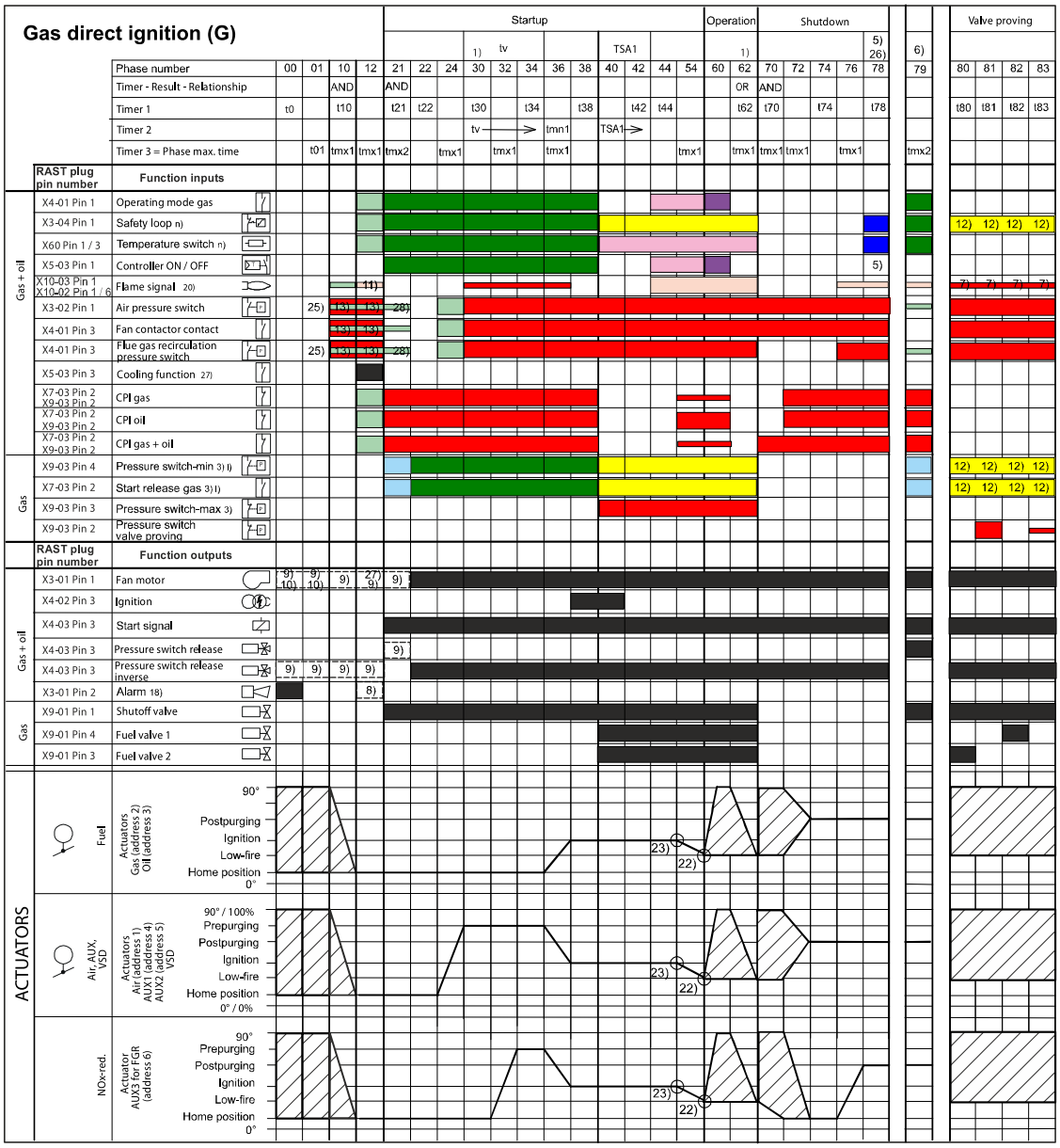

Time sequence diagram, G ver. 3

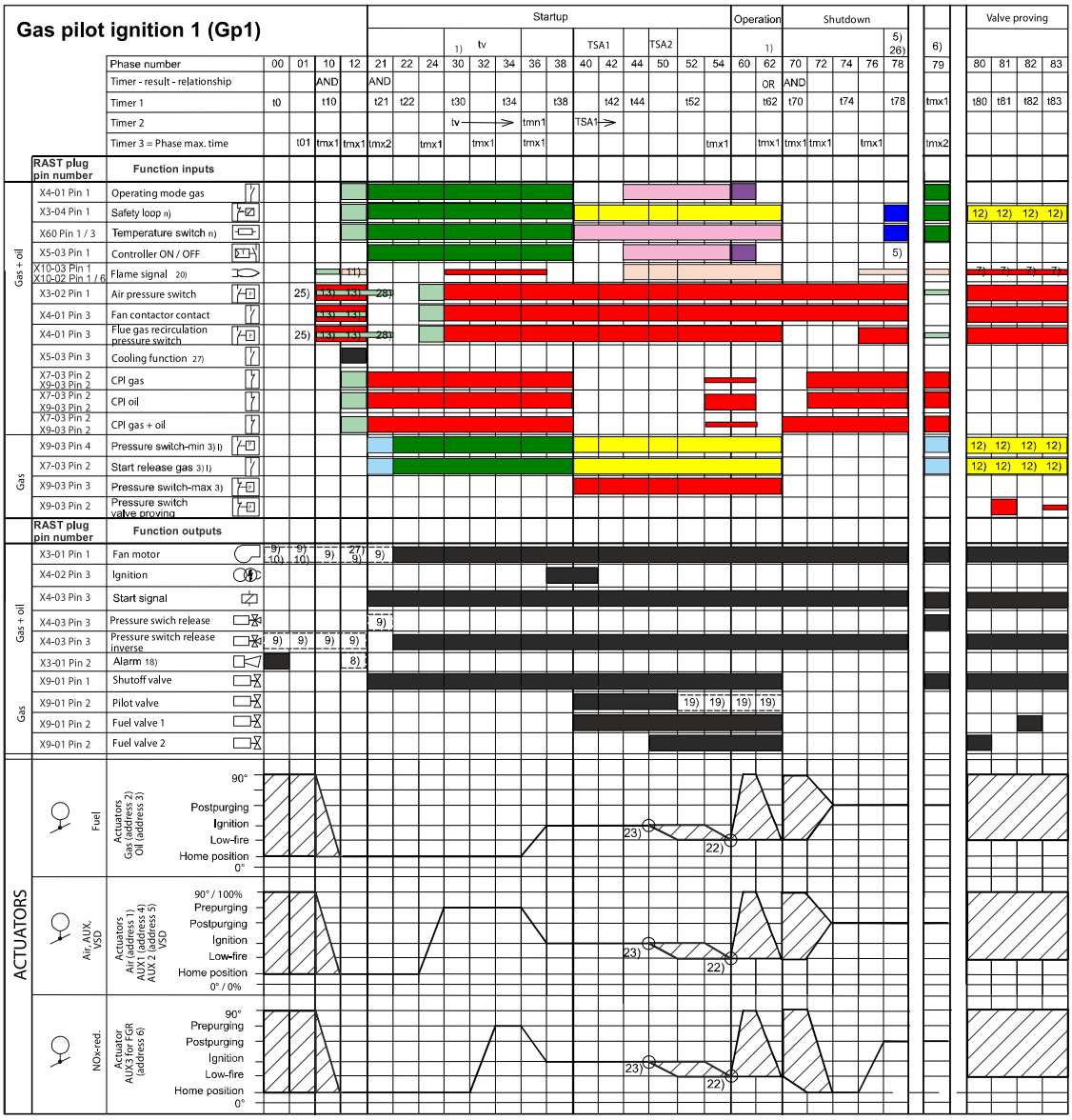

Time sequence diagram, Gp1 ver. 5

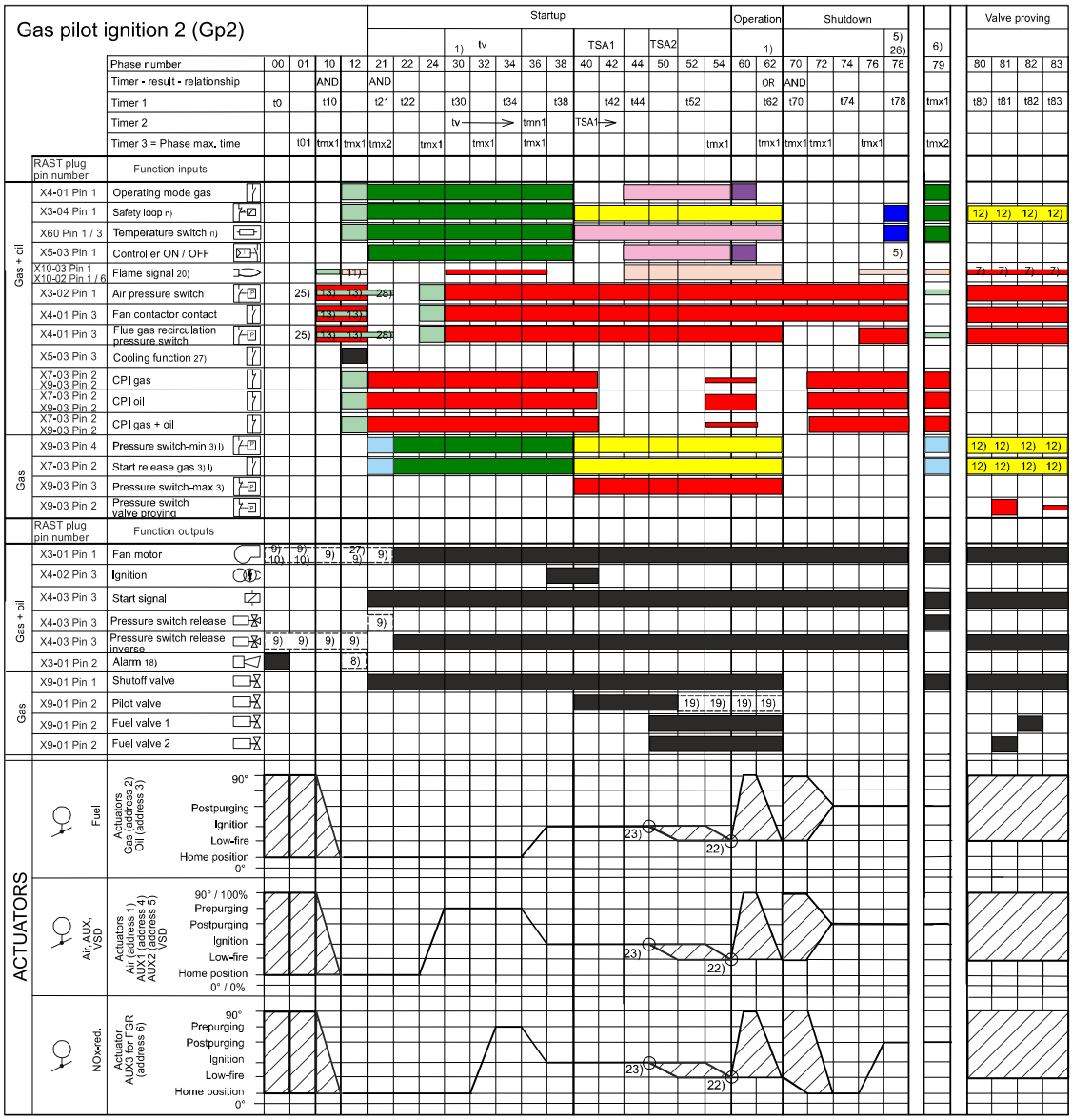

Time sequence diagram, Gp2 ver. 2

5.6 Burner automation description, gas use

Time sequence phases

Prerequisites for start-up

- Fuel selector switch in position 2 (gas).
- Failures and interlocks reset.
- Limit switch on burner flange closed.
- Safety loop closed.
- Boiler temperature limiter not activated.
- Control switch in position 1.
- Burner control in standby position.
- Manual or automatic mode selected in burner control, also capacity controller must be switched on.
- Remote control contacts closed.
- Boiler thermostat/pressure switch contact closed.
- Differential air pressure switch contact open.

20, 21 Start-up

- Burner control safety functions activate.
- Gas safety valve opens (optional).
- Gas pressure recognition, pressure switch min. closed.
- ”Gas start release” closed (optional).

22 Fan motor starts

24 Servomotors drive to pre-purge position

- Fan contactor must be closed or in frequency converter use motor sensor must detect motor rotation speed and direction
- Differential air pressure switch contact closes when air pressure is sufficient. Otherwise burner goes to a lockout. Control is active until controlled shutdown.

30... 34 Pre-purge

- Pre-purge begins.
- Automatic gas valve proving, if previous shutdown was not normal or burner has been switch-off.
- Lockout if burner control receives flame signal. Control is active until the beginning of preignition.

36 Servomotors drive to ignition position

38 Preignition begins

40... 42 Safety time begins TSA1, 2 s

- Ignition gas valve opens.
- Gas valve 1 opens.
- Ignition gas is released to ignition nozzle.
- Ignition flame is ignited by spark.
- Gas maximum pressure control period begins, pressure switch max. contact must be closed, otherwise burner control goes to a lockout.

44 Interval 1, safety time ends TSA2, 2 s

- Safety time ends, 2 s.
- Ignition ends.
- Ignition flame has to be ignited by now. Otherwise burner control goes to lockout, because flame signal has not been received.
- Flame signal has to be available to burner control from the end of the 1st safety time until controlled shutdown.
- Flame burns with set ignition load.

50 Second safety time begins

- Gas valve 2 opens.
- Gas flows through gas butterfly valve to nozzle.
- Main flame is ignited by ignition flame.

52 Interval 2

- Second safety time ends.
- Ignition gas valve closes.
- Main flame has to be ignited by now. Otherwise burner control goes to lockout, because main flame signal has not been received.
- Main flame burns with set ignition load.

54 Servomotors run to min. capacity

60 Operation

- Burner control in automatic operation: burner control capacity controller adjusts burner capacity on modulating range to correspond to the load by controlling air dampers, gas regulator and fan motor rotation speed. Burner operates controlled by burner control and capacity controller according to set parameters and functions. Burner is switch off if process value exceeds the controller setting.
- Burner in manual operation: burner operates on capacity set by user. Burner is switch-off controlled by boiler thermostat or pressure switch.
- Lockout, if flame signal or air pressure signal is lost during operation.
- Lockout, if gas pressure rises too high
- Lockout, if fan contactor contact opens or fan motor rotation speed signal disappears during burner operation.
- Lockout, if servomotors do not reach the defined position during operation.
- Lockout, if the **Esc** and **Enter** buttons on operating and display unit are pressed simultaneously during operation.
- Immediate shutdown, if gas pressure goes too low during operation.
- Immediate shutdown, if start release opens during operation.
- Immediate shutdown, if safety loop opens during operation.
- Immediate shutdown, if boiler temperature limiter activates during operation.

62 Controlled shutdown

- Servomotors run to min. load.
- Burner control carries out automatic gas valve proving.

70 Post-purge begins

- Gas shut-off valve (optional) closes.
- Gas safety valves 1 and 2 close.

72... 78 Post-purge begins

- Servomotors run to post-purge position.
- Lockout, if burner control receives flame signal.
- Fan motor stops at the end of phase 78.
- Burner control safety functions end at the end of phase 78.

10 Servomotors run to standby position

Restart possible, when standby position 12 is reached.

80... 83 Gas valve proving

- 80: emptying of piping between valves, gas valve 1 closed and valve 2 open.
- 81: test of normal pressure in piping between valves, gas valves 1 and 2 closed.
- 82: filling of piping between valves, gas valve 1 open and valve 2 closed.
- 83: pressure test of piping between valves, gas valves 1 and 2 closed.

00 Lockout phase

- Servomotors run to stand-by position.
- Burner failure activates.
- Requires manual reset.

5.7 Time sequence diagram, oil use

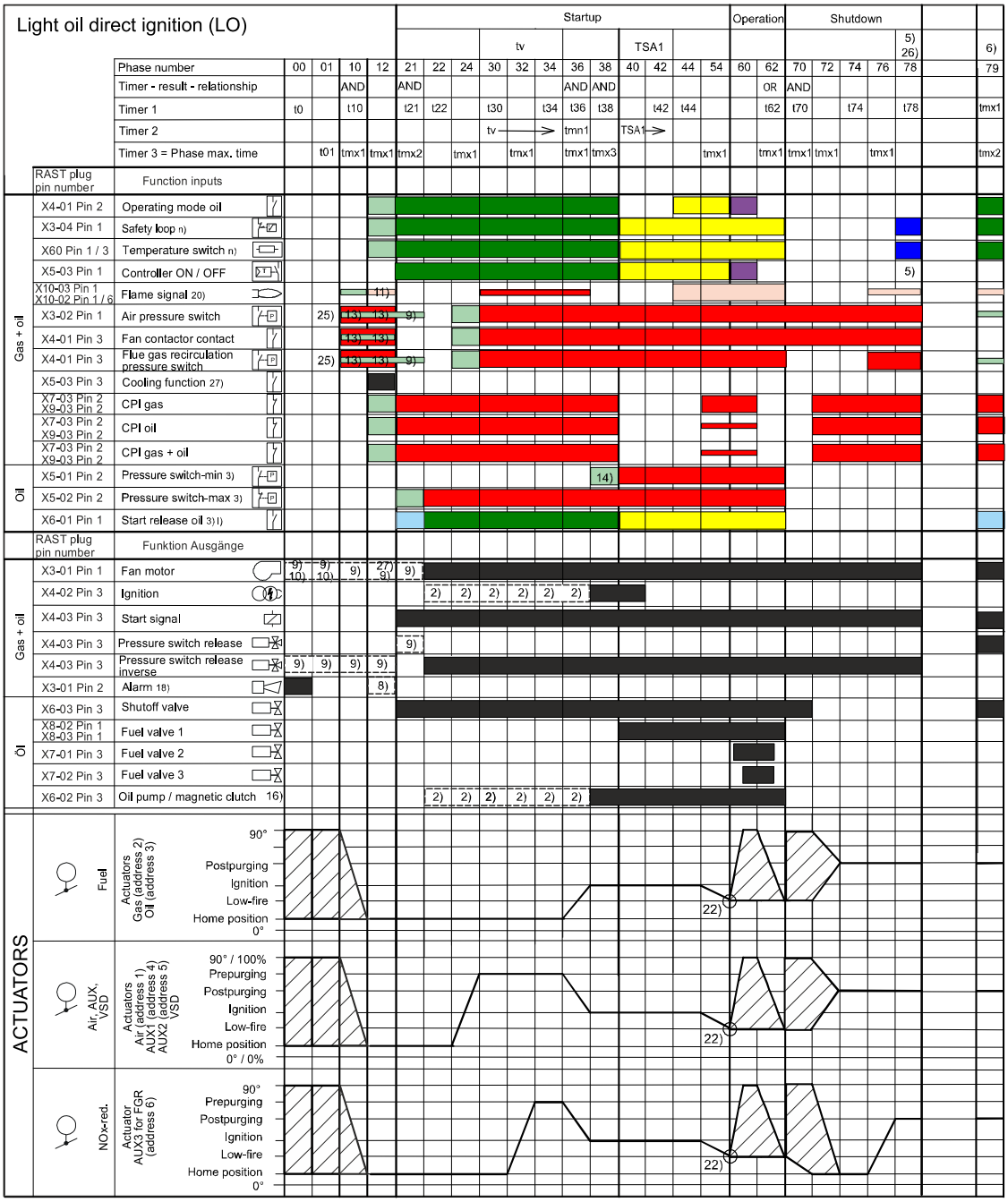

Time sequence diagram, LO ver. 5

5.8 Burner automation description, oil use

Prerequisites for start-up

- All malfunctions and lockouts must be reset.
- Burner flange limit switch must be closed.
- Safety switch circuit must be closed.
- Boiler temperature limiter has not been triggered.
- Control switch must be in position 2.
- Main unit must be in stand-by mode.

- Main unit must be set to either manual use or automatic use. If automatic use is selected, the capacity controller must also be switched on.
- Remote start-up circuit contacts must be closed
- Boiler thermostat / pressure switch contacts must be closed.

20, 21 Start-up
- Main unit safety features activate.
- Oil safety valve opens (optional)
- Return oil pressure must be below the set maximum of the pressure switch throughout normal operation until a controlled shutdown. If the pressure switch is triggered, fuel intake is cut and the burner shuts down.
- Oil start-up release switch must be closed (optional).

22 Fan motor starts and pre-ignition is initiated

24 Servomotors drive to their pre-purge position
- Fan contactor must be closed.
  If frequency converter is in use, motor sensor must detect motor rotation speed and direction.

30... 34 Pre-purge
- Pre-purge begins.
- Lockout if burner control receives flame signal. Control is active until the beginning of pre-ignition.

36 Servomotors drive to ignition position

38 Pre-ignition begins

Oil pump motor starts.

40... 42 Safety time begins
- Control circuit nozzle valve solenoid valve NC opens.
- Nozzle valve opens when pressurized oil reaches nozzle valve control circuit.
- Oil atomizing begins with ignition position atomizing pressure.
- Oil is ignited by spark.

44 Interval 1, safety time ends
- Safety time ends.
- Ignition ends.
- Flame has to be ignited by now. Otherwise burner control goes to lockout, because flame signal has not been received.
- Flame burns with set ignition load.

54 Servomotors run to min. capacity

60 Operation
- Burner control in automatic operation: burner control capacity controller adjusts burner capacity on modulating range to correspond to the load by controlling air dampers, fuel regulator and fan motor rotation speed. Burner operates controlled by burner control and capacity controller according to set parameters and functions. Burner is switch off if process value exceeds the controller setting.
- Burner in manual operation: burner operates on capacity set by user. Burner is switch-off controlled by boiler thermostat or pressure switch.
- Lockout, if flame signal or air pressure signal is lost during operation.
- Lockout, if return oil pressure rises too high.

- Lockout, if fan contactor contact opens or fan motor rotation speed signal disappears during burner operation.
- Lockout, if servomotors do not reach the defined position during operation.
- Lockout, if the **Esc** and **Enter** buttons on the operating and display unit are pressed simultaneously during operation.
- Immediate shutdown, if start release opens during operation.
- Immediate shutdown, if safety loop opens during operation.
- Immediate shutdown, if boiler temperature limiter activates during operation.

62 Controlled shutdown
- Servomotors run to min. load.

70 Post-purge begins
- Oil pump motor stops.
- Main oil valve closes.
- Nozzle valve closes when oil pressure in control circuit disappears.
- Flame extinguishes.

72... 78 Post-purge begins
- Servomotors run to post-purge position.
- Lockout, if burner control receives flame signal.
- Fan motor stops at the end of phase 78.
- Burner control safety functions end at the end of phase 78.

10 Servomotors run to stand-by position

Restart possible, when stand-by position is reached.

00 Lockout phase
- Servomotors run to stand-by position.
- Burner failure activates.
- Requires manual reset.

In fault conditions fuel supply is shut off immediately, and the fan stops. If lockout occurs, the fault is shown on the operating and display unit. Lockout can be reset immediately. After resetting servomotors run to stand-by position. Only then burner control begins with a new burner start-up.

CAUTION	Immediate shutdown means that fuel supply will be cut off immediately regardless of load. System continues normal shutdown sequence from phase 70.

CAUTION	Controlled shutdown means that burner capacity will be run down. Fuel supply will be cut off, and shutdown sequence continues from phase 70.

! Note	Pressing of burner failure reset button during burner operation causes a lockout. Button is also used as emergency stop button.

! Note	Lockout means that fuel supply is cut off immediately regardless of load. Fan stops and servomotors run to stand-by position.

6 Maintenance

6.1 Burner maintenance

DANGER!	Installation, commissioning, or service of the appliance is to be carried out by authorized and trained personnel only, adhering to all local regulations and requirements.

DANGER!	Fasten all safety covers, enclosures, and guards with all screws before start-up. Use appropriate tools.

DANGER!	Cut off power supply to burner and close manual shut-off valves always before any maintenance work. Cutting power is adequate when just inspecting the device.

To maintain flawless operation, do the following at least once a year:

1. Check burner head extension, and change if necessary.
2. Check diffuser disc, and change if necessary. Check burner adjustments if diffuser disc appears oily.
3. Check ignition cable condition from the whole length. Change, if necessary.
4. Clean and check ignition electrodes, and check correct position. Change, if necessary.
5. Change oil nozzle if it is worn out or damaged.
6. Check flame detector position, condition and cleanness.
7. Clean filters at least once a year. Filters may have to be cleaned more often depending on circumstantial conditions.
8. Check air dampers fixing screws and servomotor axle lock. Retighten if necessary.
9. Check and lubricate adjustment rod joints.
10. Check oil pump capacity.
11. Clean burner from dust and moisture.
12. Check gas pipings for leaks.
13. Check combustion characteristics by flue gas measurements regularly or when sooting boiler.
14. Check regularly combustion characteristics by flue gas measurements, after refilling storage tank or at least once a year.
15. Check if oil tank needs to be cleaned. Oil tank must be cleaned at least every 4–5 years.

Recommended maintenance

Accurate installation, and adjustments, as well as regular maintenance ensure correct burner operation.

Correct installation, adjustments, and regular maintenance ensure trouble-free burner operation.

- Service the burner annually.
- Use only original spare parts.
- When ordering spare parts, give the burner type and serial number indicated on the burner type label or manufacturing card.

If you need help with maintenance issues, contact your nearest representative or Oilon customer service at http://www.oilon.com/customer-service/.

Burner contains electric and electronic components. Adhere to rules and regulations from local authorities when disposing. See also section *Handling and storing*.

6.2 Dismounting combustion head

Disassemble the combustion head components in the same order as in the table, and reassemble in reverse order.

Components

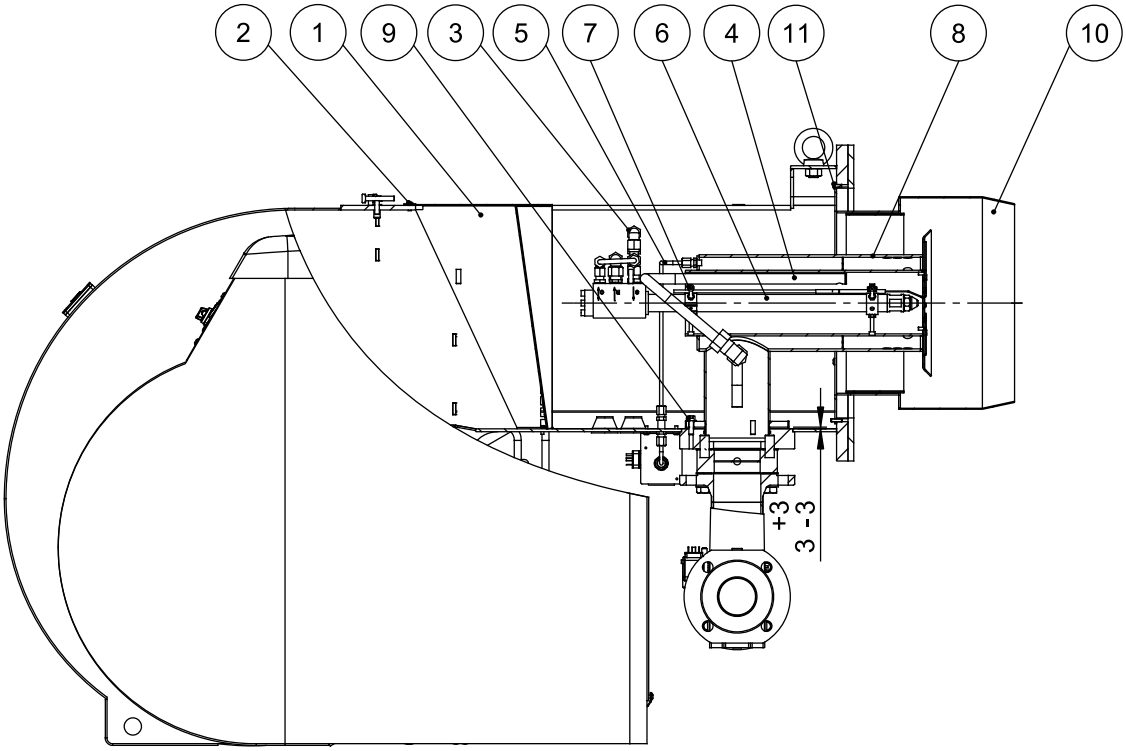

D042330 ver. 1

Pos.	Item
1	Air guide
2	Air guide fastening screws
3	Oil hoses
4	Ignition gas nozzle
5	Gas pressure impulse tube
6	Nozzle valve
7	Nozzle valve fastening screw
8	Gas nozzle

Pos.	Item
9	Gas nozzle fastening screws
10	Combustion head
11	Combustion head fastening screws

CAUTION

Check that gas nozzle is centralized in relation to the adjustment ring.

Note

Check O-ring when assembling. Change if necessary.

6.3 Dismounting and changing burner motor

DANGER !

Cut off electricity from burner and ensure the motor has no voltage.

Fan cross section

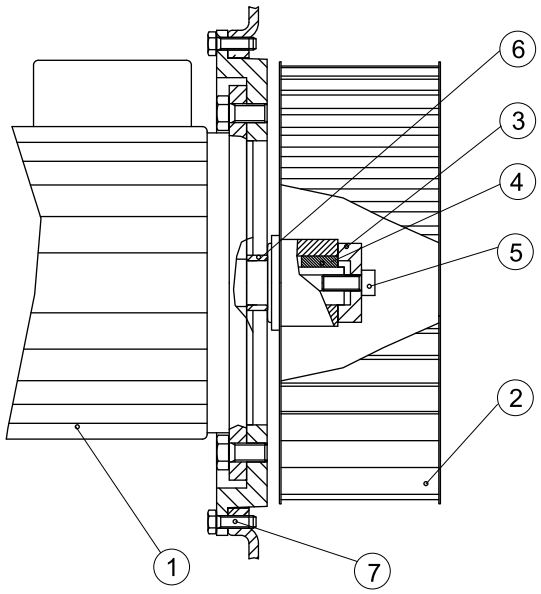

A416L ver. 3

1 Motor
2 Fan wheel
3 Fixing sleeve
4 Wedge
5 Fixing screw of fan wheel
6 Base bushing
7 Fixing screw of mounting flange

Note

Use a lifting device or belt for lifting fan motor, if necessary.

To dismount motor and fan wheel:

1. Switch off the burner from the mains.
2. Disconnect the electrical cable of the motor.
3. If in use, detach the rotation speed sensor from the motor's fan casing.

4. Screw off screws in the motor mounting flange and lift the motor away.
5. Screw off the fan wheel fixing screw and fixing sleeve.
6. Pull out the fan wheel from motor shaft using an extractor.
7. Loosen the wedge and base bushing.

To mount motor and fan wheel:

1. Place base bushing.
2. Set the wedge into the shaft slot.
3. Pull the fan wheel to its place using a binder plug. The fan wheel lies against base bushing.
4. Place the fixing sleeve.
5. Screw down the fan wheel with a fixing screw to the motor shaft.
6. Place the motor and attach screws.
7. Connect the electrical cable to the motor.
8. Connect the burner to the mains. Check motor rotation direction.

6.4 Dismounting and changing servomotors

To disconnect cables:
1. Switch off the power from the burner by turning the control switch.
2. Detach the connector from the burner control's side.

Connect in reverse order.

Servomotor of gas butterfly valve DMK-Q

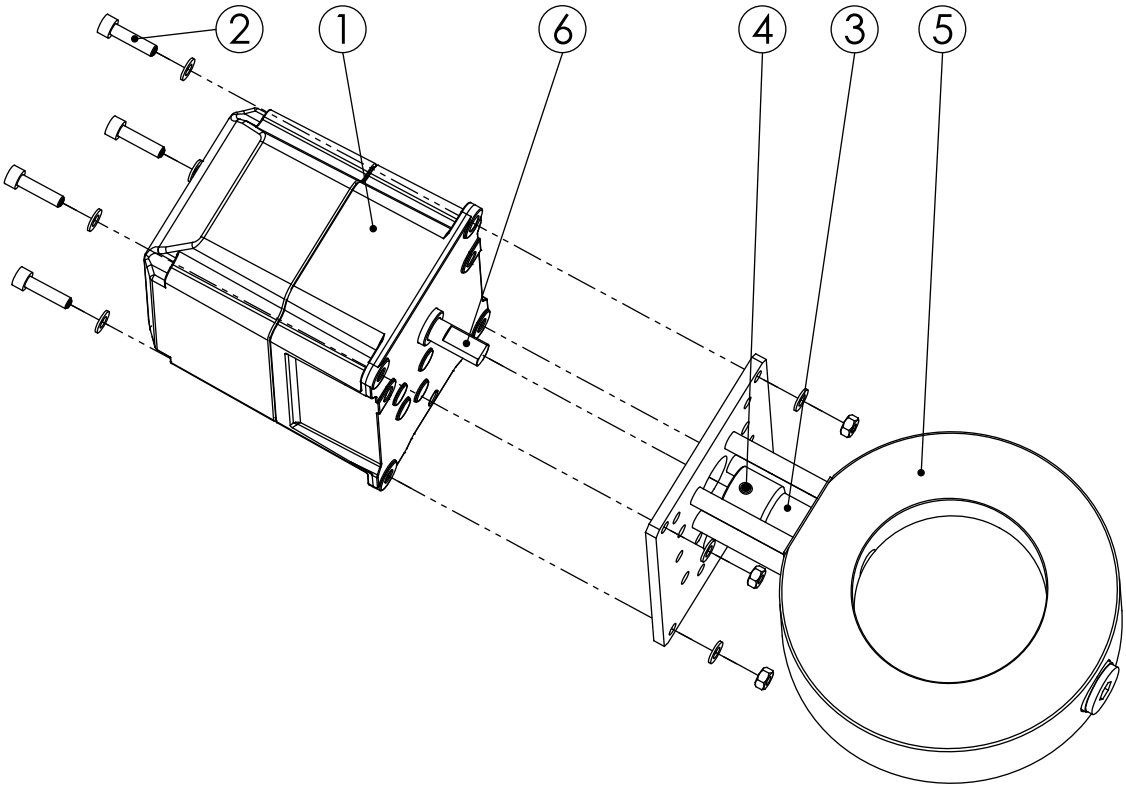

D041453 ver. 1

Pos.	Item	Pos.	Item
1	Servomotor	4	Shaft coupling aligning screw and clamping screw
2	Servomotor fixing screw	5	Butterfly valve DMK-Q
3	Shaft coupling	6	Aligning surface of servomotor's shaft

1. Disconnect the cables according to the instructions.
2. Loosen the clamping and aligning screw of the shaft coupling (shaft coupling stays on butterfly valve's shaft)
3. Detach the servomotor fixing screws and remove the servomotor.
4. Fix the new servomotor to the shaft coupling.
5. Check first that the shaft coupling aligning screw is at engine shaft level.
6. Tighten the clamping screw.
7. Tighten the servomotor fixing screws.
8. Connect the cables according to the instructions.

Servomotor of gas butterfly valve VKF41

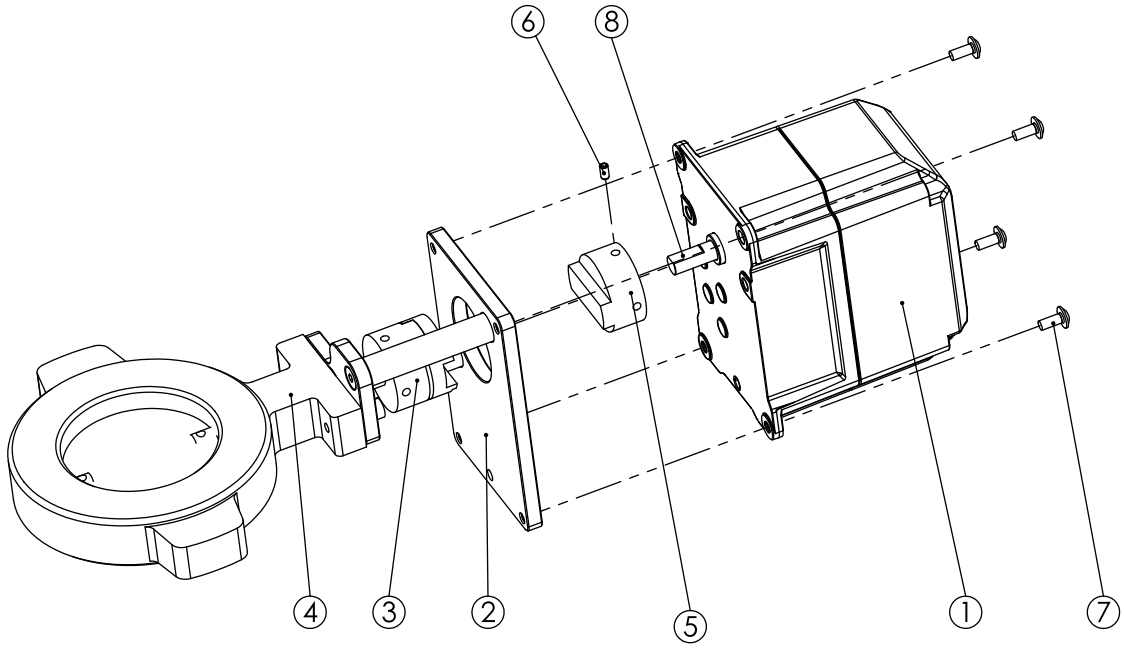

D033571 ver. 1

Pos.	Item	Pos.	Item
1	Servomotor	5	Motor side of shaft coupling
2	Servomotor's holder	6	Shaft coupling clamping screw (M5x8 din913)
3	Shaft coupling	7	Servomotor fixing screw
4	Regulating valve	8	Shaft's aligning surface

1. Disconnect the cables according to the instructions.
2. Loosen the servomotor fixing screws; the shaft coupling half stays on motor shaft.
3. Loosen the clamping screw of the shaft coupling half and remove it from motor shaft.
4. Fix the new servomotor to the shaft coupling.
5. Check that the shaft coupling half goes down to bottom on motor shaft.
6. Check that the shaft coupling clamping screw is aligned with the motor shaft surface. Tighten the screw.

7. Place the new servomotor.
8. Tighten the servomotor fixing screws.
9. Connect the cables according to the instructions.

Removing the air damper servomotor

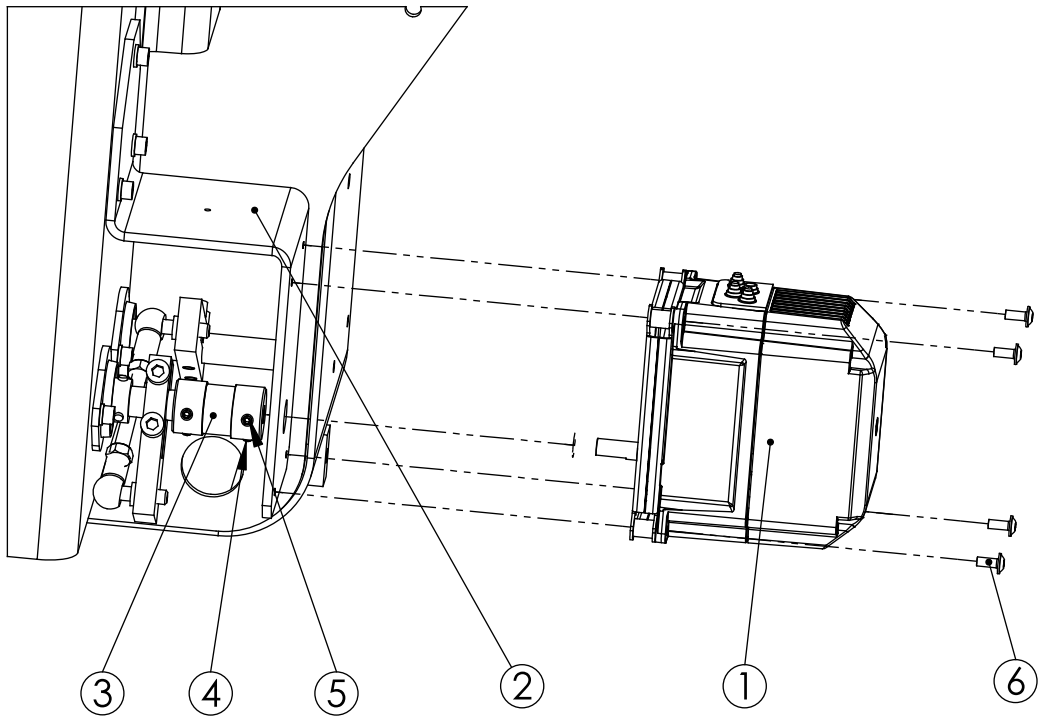

D031517 ver. 1

Pos.	Item	Pos.	Item
1	Servomotor	4	Shaft coupling aligning screw
2	Servomotor bracket	5	Shaft coupling clamping screw
3	Shaft coupling	6	Servomotor fixing screw

1. Disconnect the cables according to the instructions.
2. Loosen the shaft coupling clamping screw and aligning screw; shaft coupling is left on air damper axle.
3. Remove the servomotor fixing screws and take out the servomotor.
4. Connect a new servomotor to the shaft coupling.
5. Make sure that the shaft coupling aligning screw is aligned with the servomotor axle.
6. Make sure that the clamping screw of the shaft coupling is securely fastened.
7. Mount the new servomotor.
8. Tighten the servomotor fixing screws.
9. Connect the cables according to the instructions.

Removing regulating unit motor

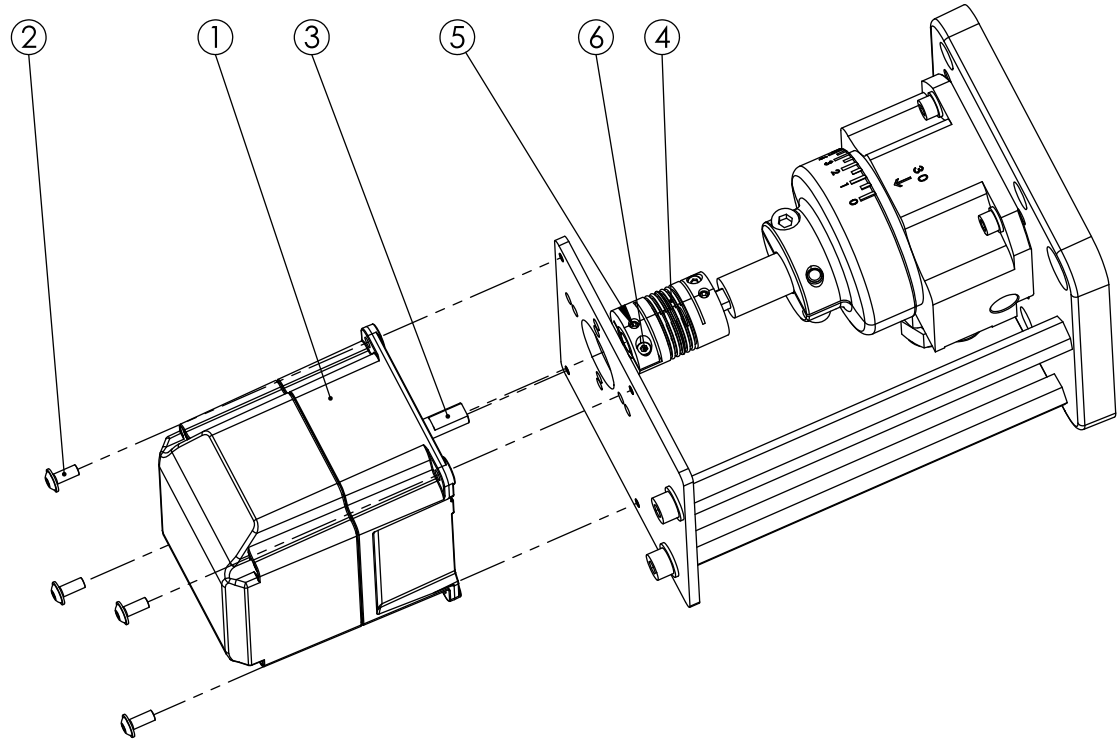

D033674 ver. 1

Pos.	Item	Pos.	Item
1	Servomotor	4	Shaft coupling
2	Servomotor fixing screw	5	Shaft coupling aligning screw
3	Servomotor shaft and aligning level	6	Shaft coupling clamping screw

1. Disconnect the cables according to the instructions.
2. Loosen the clamping and aligning screw of the shaft coupling; shaft coupling stays on regulator valve shaft.
3. Detach the servomotor fixing screws and remove the servomotor.
4. Fix the new servomotor to the shaft coupling.
5. Check that the shaft coupling aligning screw is at servomotor shaft level.
6. Check that the shaft coupling clamping screw is tightened.
7. Place the new servomotor.
8. Tighten the servomotor fixing screws.
9. Connect the cables according to the instructions.

Addressing servomotor

The address is determined by connector position (X32-X34). Determination can be changed with a PC tool.

6.5 Oil filter

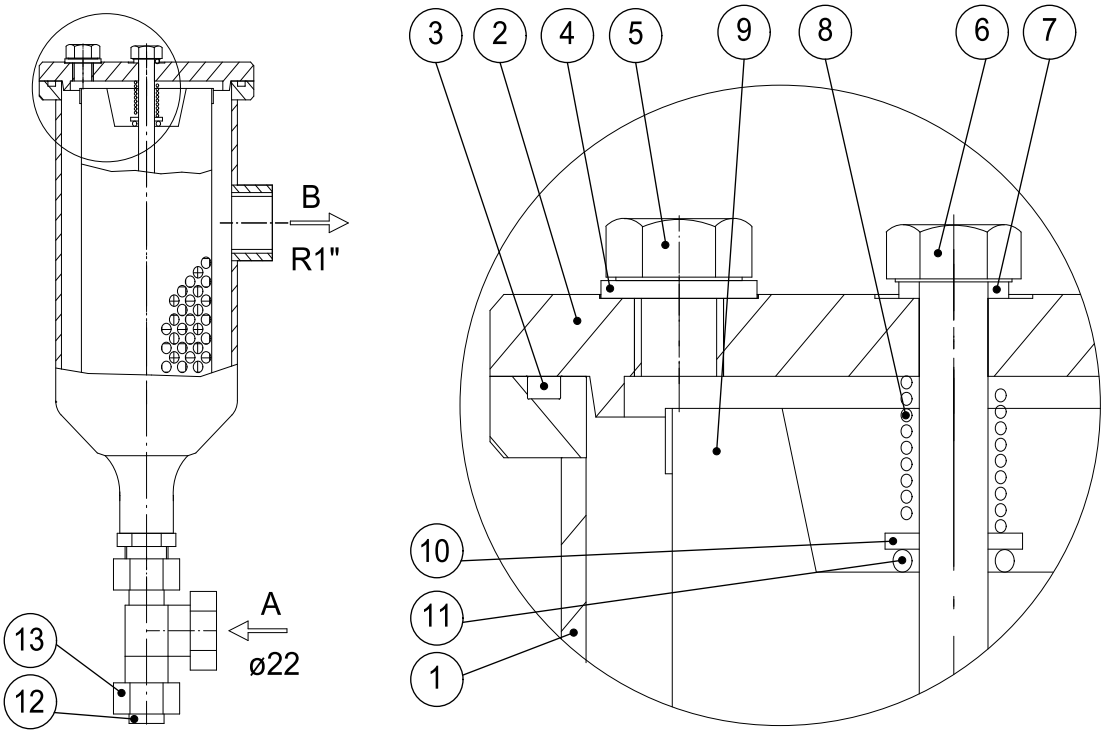

A525G ver. 4

Pos.	Item	Pos.	Item
1	Filter housing	9	Filter element
2	Filter cover	10	Washer
3	O-ring	11	O-ring
4	Gasket	12	Plug
5	Hexagon head plug	13	Nut
6	Hexagonal screw		
7	Gasket	A	Oil to filter
8	Spring	B	Oil to burner

! Note Make sure that oil viscosity is low enough for successful maintenance.

To clean the filter:

1. Close fuel supply valves.
2. Drain the filter housing (1) by loosing the nut (13) and removing the plug (12).
3. Loosen the hexagonal screw (6) and open the filter cover (2).
4. Remove the filter element (9) and replace or clean it.
5. Remove dirt from the bottom of the filter housing (1).
6. Replace gasket (7), spring (8), washer (10) and O-ring (11) together with the filter element (9).
7. If head plug (5) is opened, then also replace gasket (4).
8. Lock plug (12) with nut (13).
9. Place the filter element (9) back into the filter housing (1).

10. Make sure that the O-ring (3) is properly placed and put the cover (2) on.
11. Fasten the cover (2) with hexagonal screw (6) to a torque of 25–30 Nm.
12. Open fuel supply valves.

6.6 Nozzle valve operation and maintenance RPL-1

Nozzle valve RPL-1 components

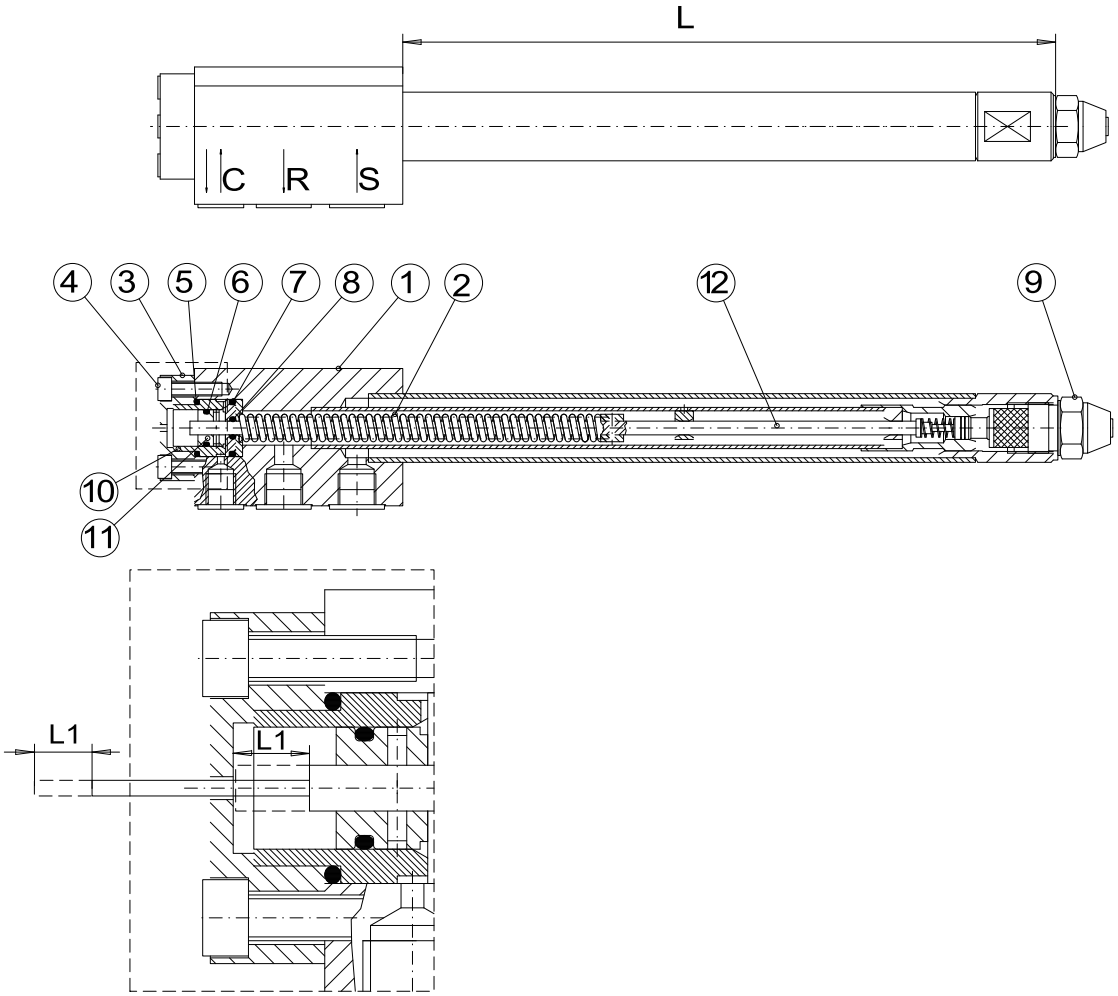

B384E ver. 3

Pos.	Item	Pos.	Item
1	Body	10	Cylinder
2	Break spring	11	Piston
3	Rear cover	12	Spindle
4	Hexagonal socket screw		
5	O-ring for cover 18.72 x 2.62 Viton	C	Control circuit
6	O-ring for piston 12 x 2 Viton	R	Return from nozzle
7	O-ring for bottom plate 18.72 x 2.62 Viton	S	Outlet to nozzle
8	O-ring for spindle 6 x 2 Viton	L	Nominal size of nozzle valve
9	Oil nozzle	L1	Nozzle open position, checking the spindle movement

RPL-1 Operation principle

The opening of the nozzle valve is controlled by solenoid valves and oil pressure. The force of oil pressure on piston must exceed the force of the spring. The pressure of the spring closes the nozzle valve, when oil pressure stops having effect on nozzle valve. The needle valve of the nozzle closes. The needle in the nozzle valve is completely drawn when oil pressure in control circuit is approx. 18 bar18 bar / 261 PSI261 PSI (1800 kPa).

When to change nozzle

If nozzle is functioning improperly, clean nozzle with diesel oil. If cleaning does not fix problem, nozzle has to be changed. New nozzle has to be of the same type as the original.

If there is an oil leak from hole in rear cover, change nozzle or install a repair kit.

6.7 Oil regulator

Oil regulator function

When swing angle of servomotor shaft is in position 0º, dosing shaft is in open position. Return flow is at the maximum, and return pressure at the minimum.

When swing angle of servomotor shaft is at its maximum 90º, dosing shaft is in closed position. Return flow is at the minimum, and return pressure at the maximum.

! Note	• Pressure gauge on regulator shows return pressure. • The size of the groove on dosing shaft is marked to shaft's end.

Oil regulator components for models 300 - 600

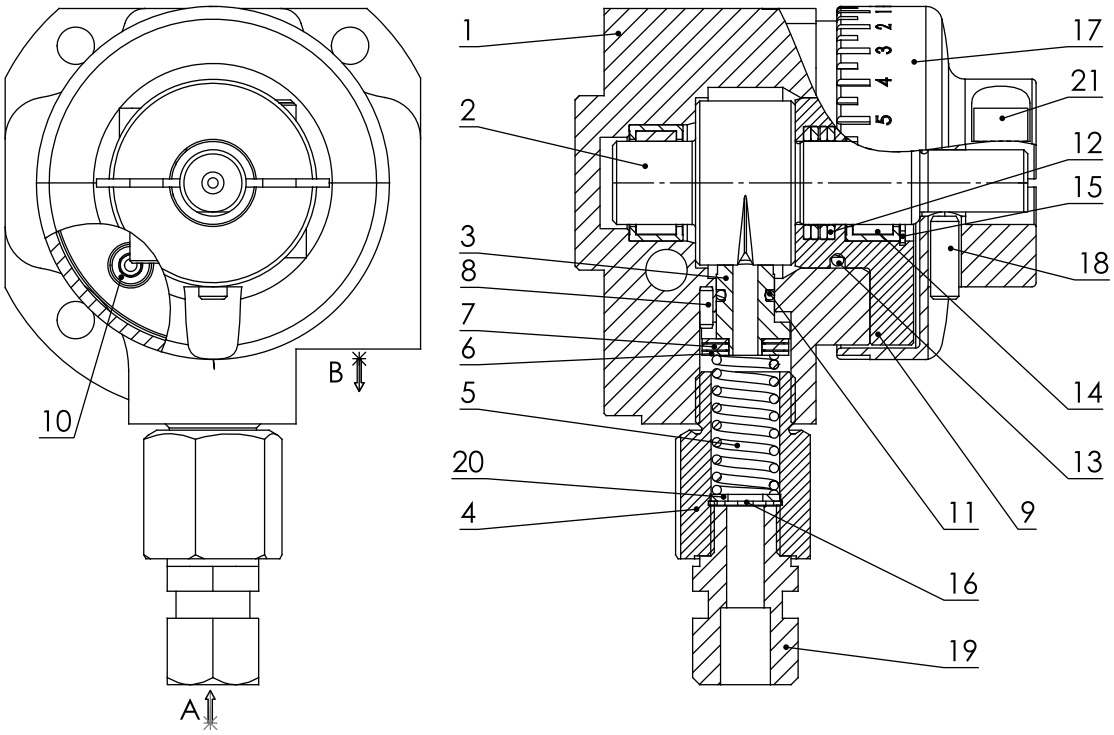

D033714 ver. 1

Pos.	Item	Pos.	Item
1	Body	13	O-ring
2	Dosing shaft	14	Needle bearing
3	Dosing nozzle	15	Retaining ring
4	Nipple	16	Retaining ring
5	Spring	17	Switch/scale
6	Thrust washer	18	Hexagon socket grub screw
7	Roller bearing	19	Connector
8	Spring cotter	20	Washer
9	Front flange	21	Hexagon socket-head screw
10	Hexagon socket-head screw		
11	O-ring	A	Oil to regulator
12	X-ring	B	Oil from regulator

6.8 Testing safety and control devices

Perform safety tests for the following components always during burner maintenance or checking. Perform tests at least once a year.

The following components should be tested:
- flame detector
- differential pressure switch
- gas pressure switches
- oil pressure switches

- servomotors
- O_2 /CO trim control (if equipped)
- boiler safety devices

Flame detector

Test method	Outcome
Step 1 1. Prevent any light from reaching the detector and start the burner. 2. Start the burner.	The burner must shut down and lockout at the end of safety time. Error code 25 and the text **No flame at end of safety time.**
Step 2 1. Start the burner. 2. Activate the flame detector with a light source during pre-purge.	The burner must shut down and lockout at pre-purge program phase. Error code 23 appears on the display.
Step 3 1. Start the burner. Wait until the start-up sequence is finished. 2. Remove the flame detector from the burner, and prevent any light from reaching the detector.	The burner shuts down. Error code 26 and the text **Loss of Flame** appear on the display.

Differential pressure switch

For the physical location of the ports and for adjusting the switch, see section *Adjusting combustion differential air pressure switch*.

Test method	Outcome
Step 1 1. Disconnect the high pressure hose (+) from the switch. 2. Start the burner. After testing, reconnect the high pressure hose.	Boiler pre-purging begins. The burner must shut down before the pre-purge cycle is completed. Error code 28 and a text **Air pressure off** appear on the display.
Step 2 1. Disconnect the low pressure hose (-) from the switch. 2. Start the burner. After testing, reconnect the low pressure hose.	Boiler pre-purging begins. The burner must shut down before the pre-purge cycle is completed. Error code 28 and a text **Air pressure off** appear on the display.
Step 3 1. Start the burner. Wait until the start-up sequence is finished. 2. After the start-up is completed, rotate the setting wheel on the switch towards the maximum setting. After testing, return the setting wheel to its original position.	The burner should shut down before the maximum setting. Error code 28 and text **Air pressure off** appear on the display.
Step 4 1. Start the burner. Wait until the start-up sequence is finished. 2. After the start-up is completed, disconnect both pressure hoses from the switch. After testing, reconnect both hoses to the original positions.	The burner should shut down immediately after hoses are disconnected. The burner will shut down immediately. Error code 28 and text **Air pressure off** appear on the display.

Gas pressure switches

For instructions on adjusting the switches, see section *Adjusting gas pressure switches*.

Gas pressure, minimum

Test method	Outcome
Step 1 1. Rotate the setting wheel on the switch to its maximum value. 2. Start the burner. After testing, return the setting wheel to its original position and reset the switch.	Boiler pre-purging begins. The burner must shut down before the pre-purge cycle is completed. Error code 2F and the text **Gas Pressure has dropped below minimum Limit** appear on the display.
Step 2 1. Start the burner. Wait until the start-up sequence is finished. 2. Rotate the setting wheel on the switch towards the maximum value while the burner is running. After testing, return the setting wheel to its original position and reset the switch.	The burner should shut down before the maximum setting. Error code 2F and the text **Gas Pressure has dropped below minimum Limit** appear on the display.

Gas pressure, maximum

Test method	Outcome
1. Start the burner. Wait until the start-up sequence is finished. 2. Drive the burner to maximum capacity. 3. Rotate the setting wheel on the switch towards the minimum value while the burner is running. After testing, return the setting wheel to its original position and reset the switch.	The burner will shut down before the minimum setting. Error code 30 and text **Gas Pressure has exceeded maximum Limit** appear on the display

Oil pressure switches

For instructions on adjusting the switches, refer to section *Adjusting oil pressure switches*.

Minimum pressure switch

Test method	Outcome
Step 1 1. Move the setting on the switch to its maximum position. 2. Start the burner.	Starting sequence is aborted automatically. Error code 34 and the text **Oil Pressure below Minimum** appear on the screen.
Step 2 1. Return the switch setting to its original position. 2. Start the burner.	The burner starts normally.

Return oil pressure switch (max.)

Test method	Outcome
Step 1 1. Move the setting on the switch to its minimum position. 2. Start the burner.	Starting sequence is aborted automatically. Error code 35 and text **Oil Pressure above maximum** appear on the screen.
Step 2 1. Return the switch setting to its original position. 2. Start the burner.	The burner starts normally.

After the test, return the dial to its original position.

Servomotors

During burner start-up the burner control drives the servomotors to maximum position and during shutdown to 0-position. The burner control supervises the correlation of the position settings and back coupling.

During burner shutdown, check the air damper and the locking screws of the fuel adjusting valve. Push air damper lightly to make sure they are firmly attached.

O_2 /CO trim control (if equipped)

- The system is self-checking during start-up.
- Confirm proper fuel/air ratio with flue gas analysis.

Boiler safety devices

Test method	Outcome
When the burner is in standby position, activate, for example, the temperature limiter switch from the boiler safety chain (X3–04:1) and start the burner. Perform this test to all safety circuit devices one by one. Devices connected to the safety circuit are described in the electrical diagram.	The burner does not start and the text **Safety loop open** switches with **Safety shutdown** on the display.

6.9 Fault and lockout history

Reading fault and lockout history from display menu

The active burner control fault status is shown on the display.

Fault and lockout history can be read from the display menu.

OperationalStart	
	FaultHistory
	LockoutHistory

Resetting fault

You can reset the burner lockout also from the control panel. Reset the fault as follows:

1. Press **Esc** until you access the menu level 1.
2. Select **Operational Stat** -> **Status/Reset**.
3. The fault code display appears on the display. Press **Esc**.
   The following text appears:

```
W o u l d   y o u   l i k e
t o   r e s e t   t h e
s y s t e m   w   E N T E R ?
```

NAYTTO1 ver. 4

4. To reset the failure, press **Enter**.
5. To return to the menu level, press **Esc**.

Burner failure can also be reset by pressing burner failure reset button on the control panel longer than 1 s, or by giving a remote reset signal.

! Note	Pressing of burner failure reset button during burner operation causes a lockout. Button is also used as emergency stop button.

Fault history stores the last 21 error messages.

Scroll history data with the **Select -/+** buttons. To change the display from code display to clear text and back, press **Enter**.

Lockout history stores the last 9 burner lockout indications. Lockout always causes shutdown.

Burner manual lockout example

```
3   23.03.05   15:43
C:A7     D:09     V:34
Start-No:   123456
Load:       0.0     Gas
```

NAYTTO2 ver. 2

- 3. lockout in history
- Occurred 23.03.2005 at 15:43
- C = error code A7
- D = diagnostic code 09
- V = phase 34
- Start-No = start counter reading at the time the fault occurred 123456
- Load = load at the time the fault occurred 0,0 %
- Gas = gas as fuel

Burner control can be reset immediately after shutdown. The servomotor runs to the stand-by position after resetting, and the burner control allows a new burner start-up.

! Note	Shutdown means failure interlocking.

O_2 trim activation example for WD200

```
12     Class:05    Oil
Code:BF   Phase:60
Diag:00   Lod:65.4
Start-No:   123456
```

Point28 ver. 3

- 12. fault in history
- Class = 05, see the following table
- Oil = Oil as fuel
- Code = BF, error code
- Diag = 00, diagnostic code
- Phase = 60, phase
- Lod = 65.4%, load at the time the fault occurred
- Start-No = start counter reading at the time the fault occurred

Fault class	Description
00	Lockout
01	Safety reset
02	Safe mode
03	Home run
04	Control stop
05	Attention

! Note	For more detailed information about fault and lockout codes, refer to Basic Documentation LMV5.

6.10 Frequency converter (WD200)

Frequency converter is started and stopped using potential-free release contact in burner control. Frequency converter alarm is connected to burner control with 12…24 VDC voltage signal that causes burner safety stop.

Frequency converter is controlled with 0 / 4…20 mA signal, the same way as servomotors. Frequency converter operation must be linear.

Control signal filters and decelerations must be removed. Acceleration and deceleration time ramps must be shorter than servomotor time ramps programmed in burner control. Minimum output frequency must be set to 0 Hz to ensure that fan motor will reach required speed under all operating conditions. Maximum output frequency must be set to 105.2 % of mains frequency, because burner control maximum speed value is 95 %.

6.11 Adjusting gas valve proving

Adjusting

Test times are set at the factory.

$$t_{Test} = \frac{(P_G - P_W) \cdot V \cdot 3600}{P_{atm} \cdot Q_{Leak}}$$

Density test formula ver. 2

Item	Unit	Description
QLeak	l/h cf/h	leakage rate, volume per hour
PG	mbar PSI	gas pressure effecting on burner
PW	mbar PSI	pressure switch setting (normally 50 % of gas pressure)
Patm	mbar PSI	absolute air pressure 1 013 mbar / 14,692 PSI
V	1	interspace volume
tTest	s	pressure test time

Example: Calculating test time and leakage rate.

P_G = 120 mbar
P_W = 60 mbar
P_{atm} = 1013 mbar
V = 1.5 l
T_{Test} = 50 l/h

$$t_{Test} = \frac{(120 - 60)\ \text{mbar} \cdot 1.5\ \text{l} \cdot 3600\ \text{s/h}}{1013\ \text{mbar} \cdot 50\ \text{l/h}} = 6.4\ \text{s}$$

EU density test 1 ver. 3

P_G = 1740 PSI
P_W = 870 PSI
P_{atm} = 14.70 PSI
V = 0.04 cf
Q_{Leak} = 1.77 cf/h

$$t_{Test} = \frac{(1740 - 870\ \text{PSI}) \cdot 0.04\ \text{cf} \cdot 3600\ \text{s/h}}{14.70\ \text{PSI} \cdot 1.77\ \text{cf/h} \cdot 941} = 6.4\ \text{s}$$

US density test 1 ver. 2

Result: Test time is 7 seconds.

P_G = 120 mbar
P_W = 60 mbar
P_{atm} = 1013 mbar
V = 1.5 l
T_{Test} = 7 s

$$Q_{Leak} = \frac{(120 - 60)\ \text{mbar} \cdot 1.5\ \text{l} \cdot 3600\ \text{s/h}}{1013\ \text{mbar} \cdot 7\ \text{s}} = 45.7\ \text{l/h}$$

EU density test 2 ver. 3

P_G = 1740 PSI
P_W = 870 PSI
P_{atm} = 14.70 PSI
V = 0.04 cf
T_{Test} = 7 sec

$$Q_{Leak} = \frac{(1740 - 870\ \text{PSI}) \cdot 0.04\ \text{cf} \cdot 3600\ \text{s/h}}{14.70\ \text{PSI} \cdot 7\ \text{sec} \cdot 941} = 1.6\ \text{cf/h}$$

US density test 2 ver. 2

Result: Leakage rate is 45,7 l/h / 1.6 cf/h.

6.12 Troubleshooting

Before troubleshooting check section *First start-up*

If the fault can not be found in the *First start-up*, check the individual burner functions. Reset the burner control if it is in lockout position. The burner goes to standby position. When the prerequisites for start are fulfilled, the burner starts. Observe the burner functions, program phase, and possible faults from the operating and display unit. Use measuring instruments for identifying the fault.

For further information, refer to *Troubleshooting fault codes* or burner control manufacturer manual.

Start failure

Condition	Possible cause	Action
Burner does not start. Burner control remains in stand-by position. Set temperature or pressure too low.	Break in control loop. Required start-up signal from burner control terminal X5-03.4 does not transfer to terminal X5-03.1.	Find out the cause of the break.
	Control unit is damaged.	Change.
Control loop closed, burner or control unit start-up program does not start.	1. Faulty servomotor 2. Faulty control unit 3. Mechanical jam in levers or couplings.	1. Change servomotor. 2. Change control unit. 3. Check and release.
	Safety loop open.	Find out cause of the break. Check burner control terminals X3-04.1 and X3-04.2
	Faulty differential air pressure switch.	Change.
	Fuel selector switch S2 in position 0.	Choose fuel.
Fan motor starts. Lockout during pre-purge.	Jammed or damaged servomotor. Servomotors do not reach desired position.	Check and adjust or change.
Burner control stays waiting for start release.	Start-up release loop is open.	Find out cause, repair.
	Low gas pressure.	Find cause and repair.
	Faulty differential air pressure switch.	Change.
	Return oil pressure too high or oil pressure too low.	Find cause and repair.

Motor failure

Condition	Possible cause	Action
Fan or oil pump motor does not start. Lockout occurs.	Break in main circuit.	Find out cause of the break.
	Break in control circuit.	Find out cause of the break, see circuit diagram. Check burner control operation. Replace faulty burner control.
	Motor overload/thermal relay released.	Check setting, reset.
	Faulty motor main relay.	Change.
	Faulty motor.	Change.
	Fault in frequency converter or soft starter (if equipped).	Check error and reset.

Lack of fan air pressure

Condition	Possible cause	Action
Fan motor starts, but during pre-purge period lockout occurs.	Faulty differential air pressure switch setting.	Check setting, adjust if necessary.
	Dirty or damaged differential air pressure switch impulse tubes.	Clean or replace.
	Faulty differential air pressure switch.	Change.
	Fan suction blocked.	Clean.
	Incorrect motor rotation direction.	Reconnect motor.

Leakage test failure

Condition	Possible cause	Action
Leakage test failure	Gas block failure	See section *Gas valve proving*.
	Gas inlet pressure to burner too low	Find out cause and repair.
	Faulty pressure switch	Change.
	Faulty gas valve	Change.

No ignition spark

Condition	Possible cause	Action
Fan motor starts, control voltage from burner control to ignition transformer is switched on, no ignition spark is formed, and after a short time lockout occurs.	Dirty or damaged ignition electrodes.	Clean or change.
	Ignition electrodes too far apart.	Adjust electrodes according to instructions in section *Adjusting combustion head*.
	Damaged or disconnected ignition cable.	Change.
	Faulty ignition transformer.	Change.

Faulty oil pump

Condition	Possible cause	Action
Oil pump motor does not start	Break in main circuit	Find out cause of the break, repair
	Motor overload relay released	Check setting, reset
	Fuse released	Tune or replace
	Faulty motor contactor	Replace
	Faulty motor	Replace
	Faulty oil pump output.	Change burner control.
No oil supply or too low atomizing pressure.	Dirty filter	Clean or replace.
	Leaking transfer pump suction line	Fix leakage.
	Pump capacity decreases. Faulty or worn-out pump.	Change.
Loud mechanical noise.	Pump is sucking air.	Tighten joints.
	Too low inlet pressure to pump.	Clean filter. Check and adjust pressure.

Premature flame establishment, oil use

Condition	Possible cause	Action
Burner motor starts then lockout (long ignition)	Faulty solenoid valve or leaking nozzle valve.	Clean or change valve.

Flame does not form

Condition	Possible cause	Action
Gas or oil use: Fan motor starts, ignition spark is in order. After a short period of time lockout occurs.	Fuel valves do not open or open too slowly:	
	Break in control circuit. Faulty actuator.	Find out cause of the break. Replace faulty part.
	Faulty fuel pressure.	Check components (filter, throttle plug, regulator, pressure switch) and adjust. See section *Oil pump*.
	Faulty fuel/air ratio.	Adjust.
	Faulty combustion head adjustment.	Check and adjust.
	Nozzle dirty or blocked.	Clean or change.
	Too low ignition load.	Check.
Oil use: Fan motor starts, ignition spark is in order. After a short period of time lockout occurs.	Nozzle valve does not open.	Change nozzle.
	Nozzle valve piston is stuck.	Change piston or O-ring.
	Faulty nozzle O-ring.	Change.

Burners with ignition pilot gas valve, ignition flame does not form

Condition	Possible cause	Action
Fan motor starts, ignition is in order. After a short time lockout occurs. Gas valve 1 or ignition gas valve(s) do not open or open too slowly.	Incorrect ignition gas valve setting	Adjust ignition gas valve.
	Faulty actuator.	Change faulty part.
	Cable damaged.	Change.
	Break in valve control circuit.	Find out cause of the break.

Burners with ignition pilot oil valve, ignition flame does not form

CONDITION	POSSIBLE CAUSE	ACTION
Fan motor starts, ignition is in order. After a short time lockout occurs. Ignition oil nozzle does not spray oil.	Too low oil pressure: 1. Oil pump does not produce enough pressure. 2. Oil pump rotation direction is incorrect.	1. Adjust, repair or change pump. 2. Change rotation direction.
	Other symptom. 1. Blocked or worn-out nozzle. 2. Faulty solenoid valve. 3. Break in control circuit.	1. Clean or change nozzle. 2. Change valve. 3. Find out cause of the break.

Lockout occurs after flame establishment

Condition	Possible cause	Action
Flame forms. Occurs lockout.	Gas pressure unstable.	Check and repair.
	Incorrect burner adjustment	Adjust.
When burner runs to full load, flame extinguishes, shutdown occurs and then re-start.	Gas pressure too low because min. gas pressure switch released.	Check operation and regulations.
	Blocked filter	Clean or replace filter.
Oil use: Flame forms. Flame extinguishes and lockout occurs when burner runs to full load.	1. Incorrect burner adjustment 2. Dirty filters 3. Clogged nozzle 4. Nozzle valve piston stuck 5. Faulty solenoid valve or coil or damaged cable.	1. Correct settings. 2. Clean filters. 3. Change nozzle. 4. Repair or change piston. 5. Change faulty component.

Flame monitoring fault, lockout

Condition	Possible cause	Action
Lockout during pre-purge.	Faulty flame detector	Change.
	Faulty burner control	Check fault code. Replace.
	Incorrect flame signal because of extraneous light	Block extraneous light.
Flame forms. Lockout during ignition phase or in normal operation.	Incorrect flame detector position	Repair.
	Dirty flame detector	Clean.
	Too weak flame (light)	Check burner adjustments.
	Faulty flame detector	Change.
	Faulty burner control	Check fault code. Replace.
Lockout in shut-down period.	Faulty flame detector	Change.
	Faulty burner control	Check fault code. Replace.
	Incorrect flame signal because of extraneous light	Block extraneous light.
	Diffuser disc overheated due to too low minimum capacity.	Adjust minimum capacity.
	Diffuser disc overheated due to too low pressure drop in combustion head.	Adjust pressure loss.
Gas use: Lockout during shutdown period	Flame does not extinguish: leaking gas valves.	Replace.
Oil use: Lockout during shutdown period.	Oil or carbon deposits in combustion head	Clean combustion head. Check combustion values.
	Nozzle valve and main solenoid valve or nozzle valve and non-return valve do not close.	Repair or change faulty part.

Oil leaks to combustion chamber

Condition	Possible cause	Action
Oil leaks to combustion chamber during idle time.	Nozzle valve and main solenoid valve or nozzle valve and non-return valve do not close.	Clean, repair or replace.
Oil leaks to combustion chamber during pre-purge.	Leaking valves	Clean, repair or replace.
Continuous oil leak from nozzle valve when nozzle is detached.	Leak in non-return valve or in main solenoid valve	Change.

Poor combustion

CONDITION	POSSIBLE CAUSE	ACTION
Poor oil atomizing.	Oil atomizing or return pressure too low.	Check and adjust.
	Nozzle spraying angle incorrect.	Try nozzle with a different spraying angle.
CO-content is too high or smoke number too high.	Pressure drop in combustion head too low.	Adjust pressure drop.
	Incorrect diffuser disc location.	Adjust diffuser disc.
Diffuser disc burned out	Too low combustion air velocity: incorrect adjustment ring position	Adjust, change diffuser disc if necessary.
	Too low partial load	Adjust, change diffuser disc if necessary.
	Incorrect distance between nozzle and diffuser disc	Adjust.
Oil use: Oil or heavy carbon deposits inside of boiler furnace.	Incorrect nozzle type or size	Change.
	Incorrect oil temperature setting.	Adjust.
	Incorrect atomizing or return pressure.	Adjust.
	Worn-out nozzle	Change.
	Leaking nozzle valve.	Change.

6.13 Troubleshooting error codes

! Note	See complete fault code list from manufacturer manual

Fault codes

Code	Diag	Description
1E	XX	Servomotors do not reach pre-purge or ignition position. Faulty servomotor.
2F	XX	Low gas pressure. Flame forms. Lockout and re-start occur.
1F, 2A, 29	XX	Motor failure.
5	XX	Faulty flame detector.
21	XX	Safety loop open.
22	XX	Temperature limiter released.
23	XX	Lockout during pre-purge.
24	XX	Lockout during shutdown.
25	XX	Flame does not form
26	XX	Fan motor starts, flame forms then lockout occurs. Flame monitoring fault.
27, 28	XX	Faulty differential air pressure.
28	XX	Lack of air pressure
31, 32	XX	Leakage test failure
34	XX	No oil supply or too low atomizing pressure. Faulty oil pump.
35	XX	Main solenoid valve does not open. Return oil pressure too high.

6.14 Burner parts

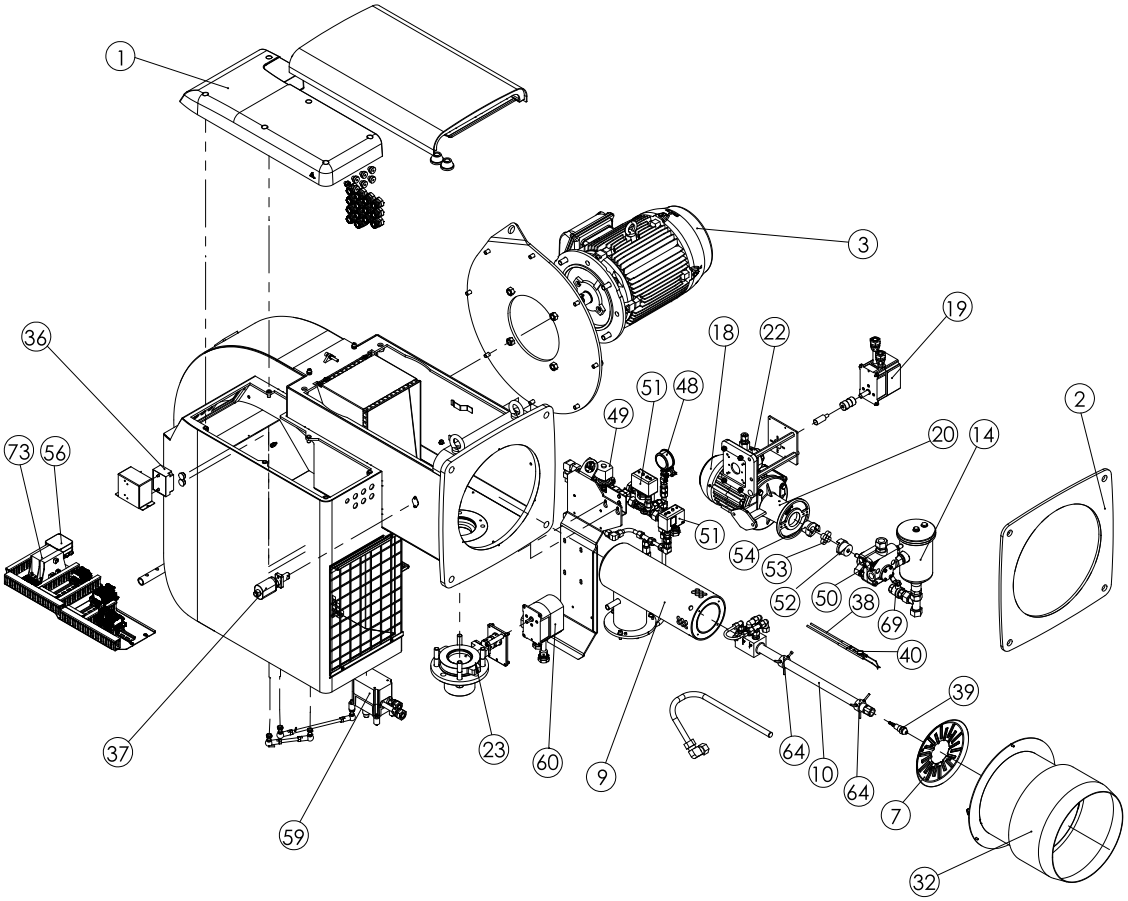

Exploded view D054888 ver. 1

! Note	The assembly may vary depending on the scope of delivery.

Gas valve

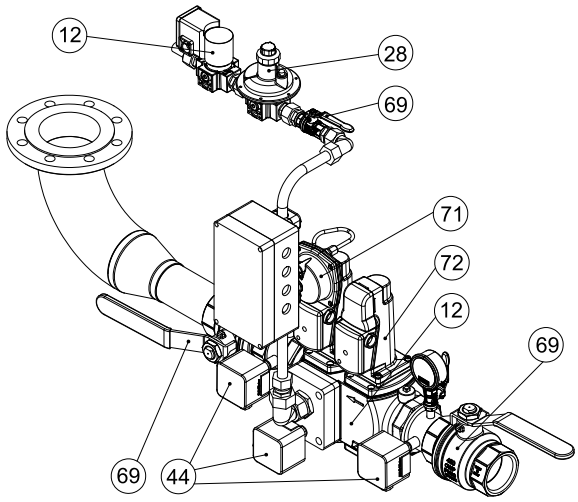

VGD40... ver. 1

FGR

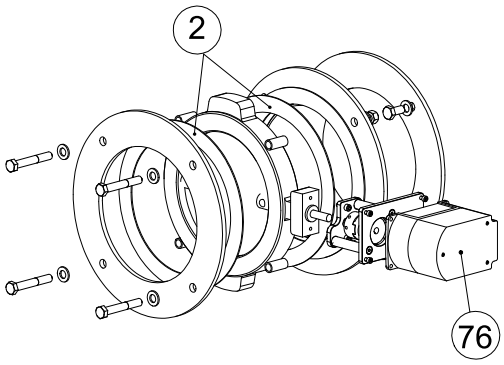

FGR ver. 2

Gas line for pilot burner optional

6.15 Burner part list

#	Part name	Recommended change interval			
		1–2 year	3–5 years	10 years	on demand/ start-up max.
1	Protective cover				X
2	Flange gasket				X
3	Fan motor				X
7	Diffuser disc				X
9	Gas nozzle				X
10	Nozzle valve			X	250 000
12	Gas valve block			X	250 000
14	Filter casing				X
18	Pump motor				X
19	Servomotor			X	
20	Spring band				X
22	Oil regulator			X	
23	Capacity controller			X	
28	Pressure regulating valve			X	
32	Combustion head				X
36	Ignition transformer		X		
37	Flame detector				
	QRI		X		
38	Ignition cable		X		
39	Nozzle	X			
40	Ignition electrode		X		
44	Pressure switch, gas			X	
48	Pressure gauge		X		
49	Main solenoid valve		X		
50	Oil pump		X		
51	Pressure switch, oil			X	
52	Coupling head for pump		X		
53	Flexible element		X		
56	Differential air pressure switch			X	
59	Servomotor, air			X	
60	Servomotor, gas			X	
64	Nozzle holder				X
69	Manual shut-off valve				X
71	Valve actuator with pressure regulator		X		
72	Valve actuator		X		
73	Power transformer		X		
76	Servomotor, FGR			X	

Contact information of Oilon dealer:

Date of installation:

OILON GROUP
P.O. Box 5
FI-15801 LAHTI
FINLAND
Tel: +358 3 85 761
Fax: +358 3 857 6239
Email: info@oilon.com
www.oilon.com