Power Flame Incorporated

CMAX

Installation and Operation Manual

POWER FLAME MODEL Cmax BURNER

For use by Qualified Service Personnel Only

Rev. 03/2009

WARNING

The improper installation, adjustment, alteration, service or maintenance of this equipment can result in fire, explosion, serious injury, or death. Refer to this manual. For assistance or additional information consult a qualified installer, service agency or the gas supplier.

Do not store or use gasoline or any other flammable liquids in the vicinity of this or any other appliance.

ATTENTION!

All Personnel involved with the startup, maintenance, or adjustment of this burner <u>must</u> read and <u>understand</u> the entire contents of this manual prior to any startup or adjustment made to the burner and related components. Installation and service must be performed by a qualified installer, service agency or the gas supplier.

WHAT TO DO IF YOU SMELL GAS

1. Do not try to light any appliance
2. Do not touch any electrical switch
3. Do not use any phone in your building
4. Immediately call your gas supplier from a neighbor's phone
5. Follow the gas supplier's instructions
6. If you cannot reach your gas supplier, call the fire department

1. GENERAL PRODUCT INFORMATION

1.1 Principle of operation

1.1.1 The Power Flame Model Cmax (CM) Burner is a forced draft, flame retention type burner which incorporates the principles of air atomization for oil and multiple orifice dual flame operation for gas. The Model CM burner is listed and labeled by Underwriters Laboratories, Inc. up to CM10C. capacity, when fired at 1.0" W.C. positive combustion chamber pressure, range from 15.6 to 461 GPH of commercial grade #2 fuel oil and/or 2,184 to 64,550 CFH of natural gas. The combustion air is furnished by an integrally mounted combustion air fan. The Power Flame packaged combustion system can be operated under positive or negative furnace pressures with clean, efficient combustion in a wide range of combustion chamber conditions.

1.1.2 Power Flame Model CM burners are also designed to produce greater flame turbulence at a reduced flame size. As a result, these burners require less combustion volume for complete combustion and can be easily fired under positive furnace pressure conditions. Forced draft, pressurized operation can accommodate stacks of smaller diameter and height.

1.1.3 The Power Flame Model CM burner is a totally packaged and factory tested combustion system offering single unit responsibility. The package incorporates accurate control of the fuel-air ratio throughout the firing range with the resultant controlled flame patterns and clean combustion for maximum efficiency.

1.1.4 Combustion air flow is controlled by a multi-louvered damper assembly. Combustion air is supplied by an integral motor-driven blower, which discharges into the burner blast tube assembly. Two separated flame zones are created by gas being injected radially into a center diffuser and axially from an outer annulus. The outer gas annulus is adjustable thereby allowing features of combustion staging. (See Figure 8 for details).

1.1.5 The air-fuel ratio is established at the time of start-up and proven with combustion test equipment to provide the lowest practical oxygen with a clean flame.

1.1.6 A Flame Safeguard Controller programs the firing cycle. The operating cycle is sequenced to ensure normal and safe conditions before fuel can be introduced into the combustion chamber area. The complete firing cycle is supervised to ensure that ignition of main flame is properly established and maintained. Flame monitoring is provided by either a lead sulfide or ultraviolet type optical scanner.

1.1.7 The limit circuit includes the operating limit control to maintain set operating pressure or temperature, as well as a high limit control to guard against excessive pressure or temperature. Low water and other similar safety controls can be interlocked into the burner control system to satisfy specific job and/or code requirements.

1.1.8 The control circuit is normally 120 volts. A control circuit transformer may be furnished to provide the 120 volts control circuit for polyphase motor voltage application.

1.1.9 Power Flame Model CM burners are capable of firing single or multi-fuel applications. For multi-fuel burners, fuel changeover may be provided by automatic control, influenced by outside temperature or manual switching. Interlocking relays and timers ensure safe changeover of fuels by means of a timed interruption of firing, long enough to cause a complete recycle of the programmer.

1.1.10 The pre-wired Control Panel is mounted and wired as an integral part of the burner in accordance with recommendations of Underwriters Laboratories, Inc. and The National Electrical Code. Components are wired to numbered terminal strips. Panel and burners are factory fire tested before shipment. Comprehensive wiring and gas and/or oil piping diagrams are furnished with each burner in accordance with individual job or application requirements. Wall mounted or free standing control panels are also available.

1.1.11 Power Flame Model CM burners are available with control systems to comply with the requirements of Factory Mutual, Industrial Risk Insurers and any special state, municipal, local and utility company codes, including New York City Department of Buildings (MEA), NYC Department of Environmental Protection, Commonwealth of Massachusetts, State of Connecticut Fire Marshall, Illinois School Code and others.

1.2 Model Identification

1.2.1 The numerical suffix after the letters CM denotes the burner frame size. The letter R inserted immediately after the letters CM denotes an inverted blower configuration.

1.2.2 The alphabetical designation immediately following the frame size indicates the fuels to be used: G is gas only; O, oil only; and GO, combination gas/oil. The numbers following the fuel designation indicate the nominal size of the gas train (30 = 3.0”).

1.2.3 Any alphabetical suffix (such as A, B, etc.) to the fuel designation denotes special product coding (consult factory).

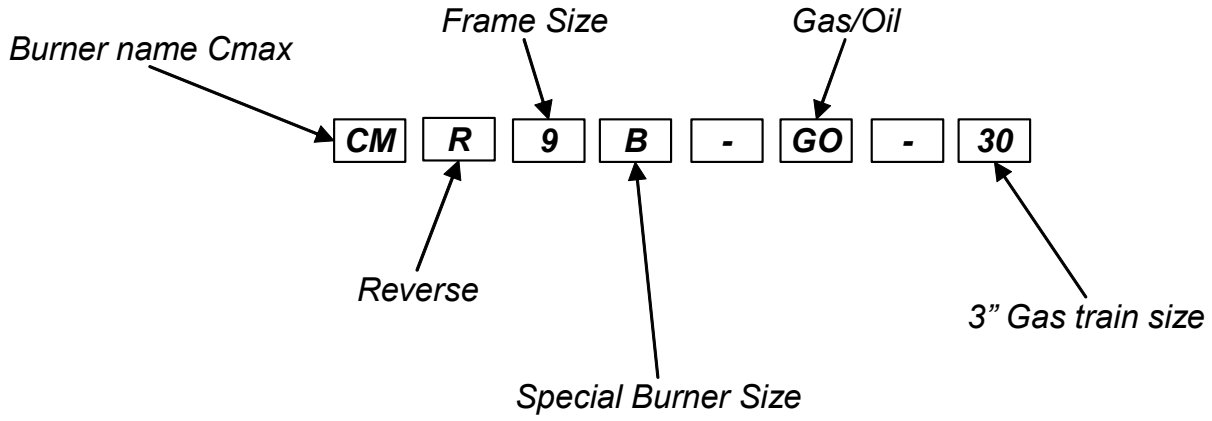

1.3 Unpacking and Handling

1.3.1 Power Flame Model CM burners are usually shipped as a unit with an integrally mounted, pre-wired control panel. A remote fuel oil pumpset is shipped separately on the oil and combination oil/gas units. A completely packaged compressor set is also shipped separately with oil and combination gas/oil systems. Gas train components may be pre-piped as an option or shipped loose for field mounting.

1.3.2 Uncrate the burner carefully and check all parts received against the computer generated Burner Specification Sheets supplied by Power Flame. Components not mounted on the burner (shipped loose) are designated with an L in the left hand column on the sheets. Claims on shortage or damage must be immediately filled with the carrier.

1.4 Warranty and Spare Parts Information

1.4.1 Power Flame offers a 15 month Limited Warranty on all components from the date of shipment (see inside of back cover for details).

1.4.2 The Owners Information envelope packed with the burner contains a Warranty Registration Card. The Warranty Registration Card is also a request form for a computer generated Spare Parts List. An on-hand supply of spare parts is highly recommended in case of emergency shutdown. The pre-addressed, postage paid Warranty Registration Card should be completed and returned to Power Flame. In the event that the Warranty Registration Card is lost, please contact Power Flame's Customer Service Department in Parsons, Kansas or you may register on-line through the Power Flame website (www.powerflame.com). All communications with the factory will be handled more efficiently if the burner is identified by the burner model, serial and job numbers. This information is stamped into the burner nameplate that is attached to the integral control panel (or to the burner, when remote control panels are supplied).

1.5 General Components Information

1.5.1 The contents of this manual are general in nature, due to the wide variety of equipment specifications, insurance requirements, state, local and other applicable codes.

1.5.2 The computer generated Burner Specification Sheets, shipped with the burner; represent the As-Built version of your specific Power Flame combustion system. Part numbers and component descriptions will match those components supplied. A duplicate set of Burner Specification Sheets is available through Power Flame's Customer Service Department or through the secured area of our website.

1.5.3 The components and arrangements shown are typical for a Model CM-GO combination gas/oil burner. Gas only or oil only units will have similar components relating to their specific fuel. In some cases, the type of components and/or their arrangement may vary from this depiction. For specifics on you system, refer to the technical information supplied with the burner.

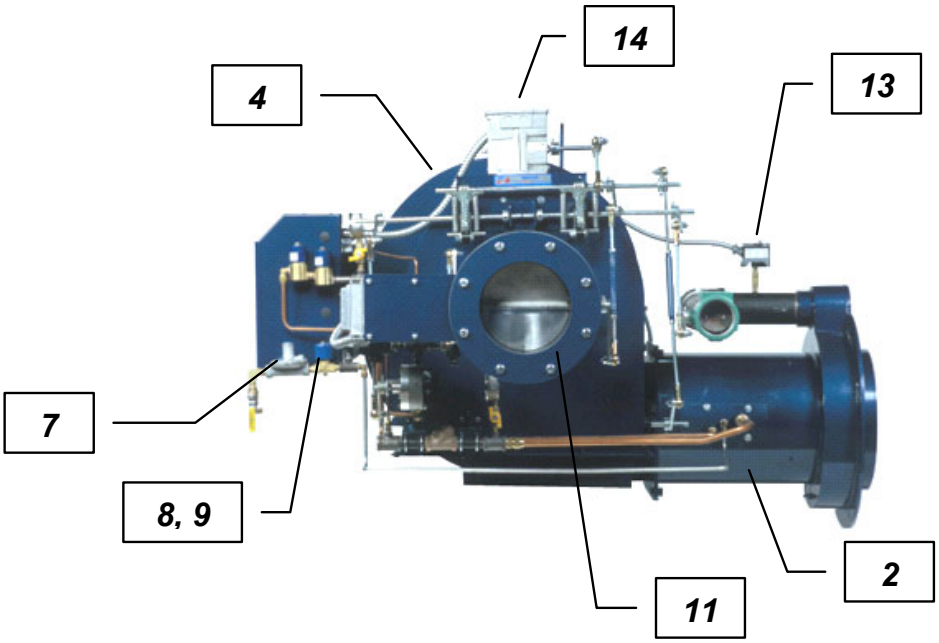

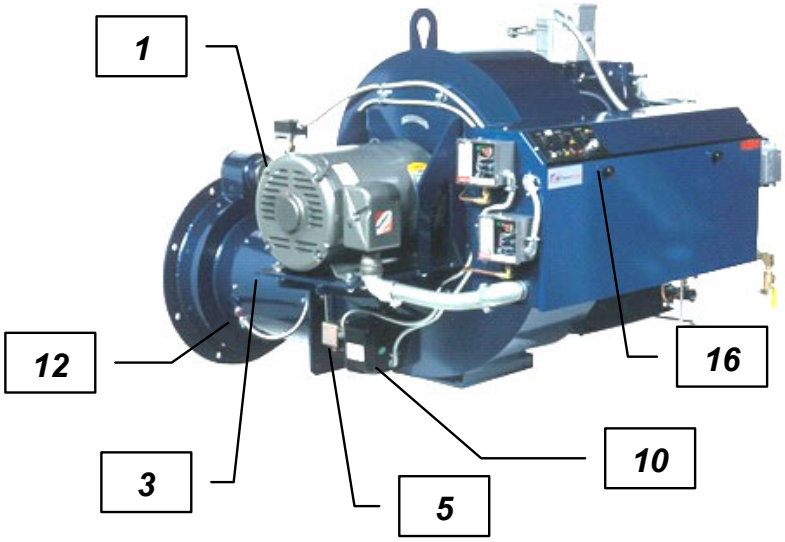

Figure 1: Burner Component Identification typical for model CM-GO

1.5.4 Parts list (refer to figure 1):

1) *Blower Motor*
2) *Blast Tube*
3) *Easy Access Door*
4) *Fan Housing*
5) *Air Flow Switch*
6) *Air Diffuser (not shown)*
7) *Gas Pilot Regulator*
8) *Gas Pilot Solenoid Valve*
9) *Gas Pilot Test Tee*
10) *Gas Pilot Ignition Transformer*
11) *Induced FGR Adapter (if so equipped)*
12) *Flame Scanner (Detector)*
13) *High Gas Pressure Switch*
14) *Modulation Motor*
15) *Oil Nozzle (Not Shown)*
16) *Control Panel*

POWER FLAME MODEL "CM9" - "CM12"

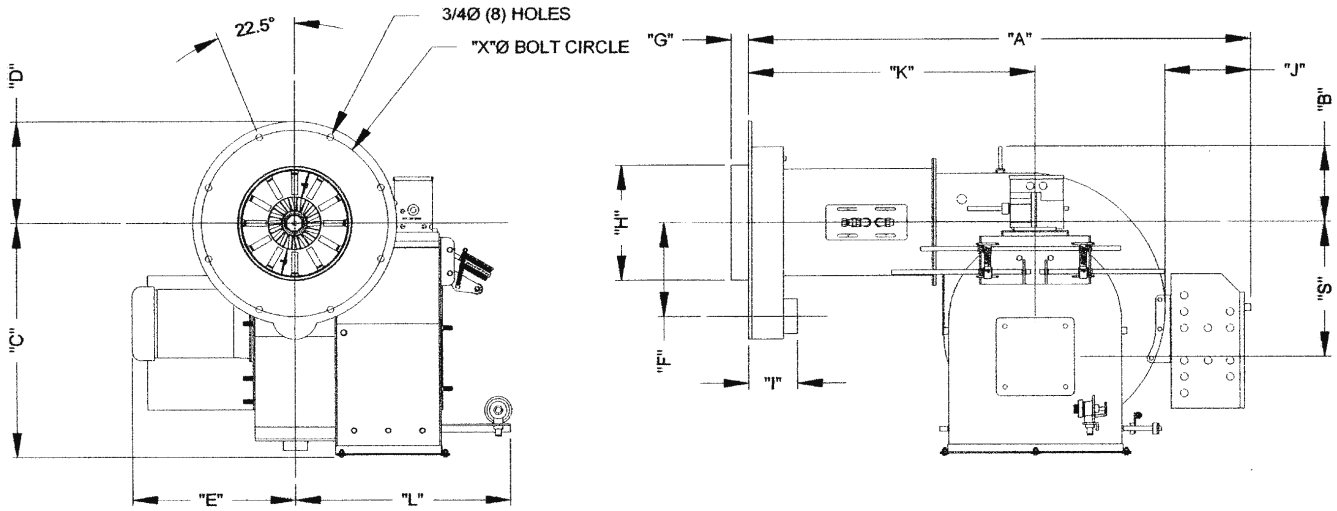

NOTE 1: DIMENSIONS CAN VARY WITH OPTIONAL EQUIPMENT AND SYSTEM ARRANGEMENTS. FINAL PIPING CONNECTIONS SHOULD BE DETERMINED AFTER INSTALLATION.

2: PFI CERTIFIED CAPACITIES LISTED ARE BASED ON +1.00" W.C. (CM9) / +2.50" W.C. (CM10) / +4.00" W.C. (CM11) / +8.00" W.C. (CM12) COMBUSTION CHAMBER PRESSURE

3: GAS PRESSURE LISTED ARE AT THE INLET TO THE MAIN SHUTOFF COCK AND REQUIRED TO OBTAIN PFI CERTIFIED RATING WITH THE STANDARD UL GAS TRAIN. OPTIONAL GAS TRAINS ARE AVAILABLE FOR LOWER PRESSURES.

4: REFER TO I&O MANUAL FOR REFRACTORY QUARREL DIMENSIONS

ALL DIMENSIONS IN INCHES, UNLESS OTHERWISE NOTED.

BURNER MODEL	A	B	C	D	E	F	G (4)	H (4)	I	J	K	L	S	X	BLOWER MOTOR H.P.	#2 OIL GPH MAX. (2)	GAS PRESS. REQ'D (IN. W.C.) (3)	NAT. GAS MBH MAX. (2)	NOMINAL BOILER H.P. MAX. (2)
CM9-G/O-30	58	8-3/4	26-15/16	11-3/4	18-13/16	10-13/16	2	13-1/4	5-5/8	9-7/8	33-3/32	24-13/16	15-17/32	21-1/2	3.0	90.0	21.0	12600	300
CM9A-G/O-30	58	8-3/4	26-15/16	11-3/4	18-13/16	10-13/16	2	13-1/4	5-5/8	9-7/8	33-3/32	24-13/16	15-17/32	21-1/2	5.0	122.0	44.0	17040	406
CM9B-G/O-30	58	8-3/4	26-15/16	11-3/4	18-13/16	10-13/16	2	13-1/4	5-5/8	9-7/8	33-3/32	24-13/16	15-17/32	21-1/2	7.5	152.0	64.0	21300	507
CM10-G/O-30	63	11-5/16	28-3/8	11-3/4	21-5/8	10-13/16	2	13-1/4	5-5/8	10-3/16	35-5/8	33	10-1/16	21-1/2	10.0	158.0	73.0	22165	528
CM10A-G/O-30	63	11-5/16	28-3/8	11-3/4	21-5/8	10-13/16	2	13-1/4	5-5/8	10-3/16	35-5/8	33	10-1/16	21-1/2	15.0	180.0	93.0	25200	600
CM10B-G/O-30	63	11-5/16	28-3/8	11-3/4	21-5/8	11-13/16	2	15-1/8	5-5/8	10-3/16	35-5/8	33	10-1/16	21-1/2	15.0	218.0	120.0	30500	726
CM10C-G/O-30	63	11-5/16	28-3/8	11-3/4	21-5/8	11-13/16	2	15-1/8	5-5/8	10-3/16	35-5/8	33	10-1/16	21-1/2	20.0	257.0	128.0	36000	857
CM11-G/O-30	68	12-3/4	34-11/16	12-11/16	25-13/16	13-7/32	2	17-1/8	5-11/16	9-3/4	37-7/8	33-1/4	15-13/32	23-3/8	25.0	329.0	77.0	46000	1095
CM11A-G/O-30	68	12-3/4	34-11/16	12-11/16	27-1/4	13-7/32	2	17-1/8	5-11/16	9-3/4	37-7/8	33-1/4	15-13/32	23-3/8	30.0	378.0	101.0	53000	1260
CM12-G/O-40	84	14-1/4	42-5/16	13-11/16	26-7/8	14-7/32	2	19-1/8	5-3/4	9-3/4	48-15/16	38	18-3/4	25-3/8	60.0	429.0	140.0	60000	1430
CM12A-G/O-40	84	14-1/4	42-5/16	13-11/16	26-7/8	14-7/32	2	19-1/8	5-3/4	9-3/4	48-15/16	38	18-3/4	25-3/8	75.0	456.0	140.0	63850	1520

Figure 2: Model CM Dimensions

2. INSTALLATION

2.1 Gas Supply Piping

2.1.1 The installer should contact the local gas utility relative to available supply pressures, limitations on allowable pressures in the building, general piping requirements and applicable codes, restrictions and regulations. Considerations of these types, as well as written permits and other state, city and local codes should be discussed with and approved by the appropriate governing bodies.

2.1.2 Gas piping should be sized to provide required pressure at the burner train inlet manual shutoff cock, when operating at the maximum desired fuel input.

2.1.3 All gas piping should be appropriately pressure tested to ensure leak free operation. It is recommended that a dirt pocket or trap be piped into the gas supply system just ahead of the burner train inlet manual shutoff cock.

2.1.4 When testing with pressures higher than the maximum pressure ratings of the gas train components, be sure to isolate these components and test their piping for gas leaks with correct pressures only.

2.1.5 Refer to Table 1 for information relating to the sizing of gas supply piping. These charts are based on the general flow characteristics of commercially produced black carbon steel pipe. If in doubt regarding flow capabilities of a chosen line size, the next largest size is recommended. Use multiplier at right for other specific gravities and pressure drops.

2.1.6 Refer to Figure 3 for the typical gas piping schematic to meet U.L. requirements in the CM burner firing ranges.

Capacity of Pipes – Natural Gas (CFH)

With Pressure Drop of 0.3" w.c. and Specific Gravity of 0.60

Pipe Length (Feet)	Pipe Size – Inches (IPS)						
	1	1-1/4	1-1/2	2	2-1/2	3	4
10	520	1050	1600	3050	4800	8500	17500
20	350	730	1100	2100	3300	5900	12000
30	285	590	890	1650	2700	4700	9700
40	245	500	760	1450	2300	4100	8300
50	215	440	670	1270	2000	3600	7400
60	195	400	610	1150	1850	3250	6800
70	180	370	560	1050	1700	3000	6200
80	170	350	530	990	1600	2800	5800
90	160	320	490	930	1500	2600	5400
100	150	305	460	870	1400	2500	5100
125	130	275	410	780	1250	2200	4500
150	120	250	380	710	1130	2000	4100
175	110	225	350	650	1050	1850	3800
200	100	210	320	610	980	1700	3500

Correction Factors

Specific Gravity other than 0.60		Specific Drop other than 0.3" w.c.	
Specific Gravity	Multiplier	Pressure drop (" w.c.)	Multiplier
0.5	1.1	0.1	0.577
0.6	1	0.2	0.815
0.7	0.926	0.3	1
0.8	0.867	0.4	1.16
0.9	0.817	0.6	1.42
1	0.775	0.8	1.64
Propane - Air		1	1.83
1.1	0.74	2	2.58
Propane		3	3.16
1.55	0.662	4	3.65
Butane		6	4.47
2	0.547	8	5.15

Note: Use multiplier at right for other specific gravities and pressure drops

Table 1: capacity of pipes and correction factors

	Pipe Size (IPS)						
	1	1-1/4	1-1/2	2	2-1/2	3	4
Std tee through side	5.5	7.5	9	12	14	17	22
Std. E11	2.7	3.7	4.3	5.5	6.5	8	12
45° E11	1.2	1.6	2	2.5	3	3.7	5
Plug Cock	3	4	5.5	7.5	9	12	16

Table 2: Equivalent Length of Fittings in Feet

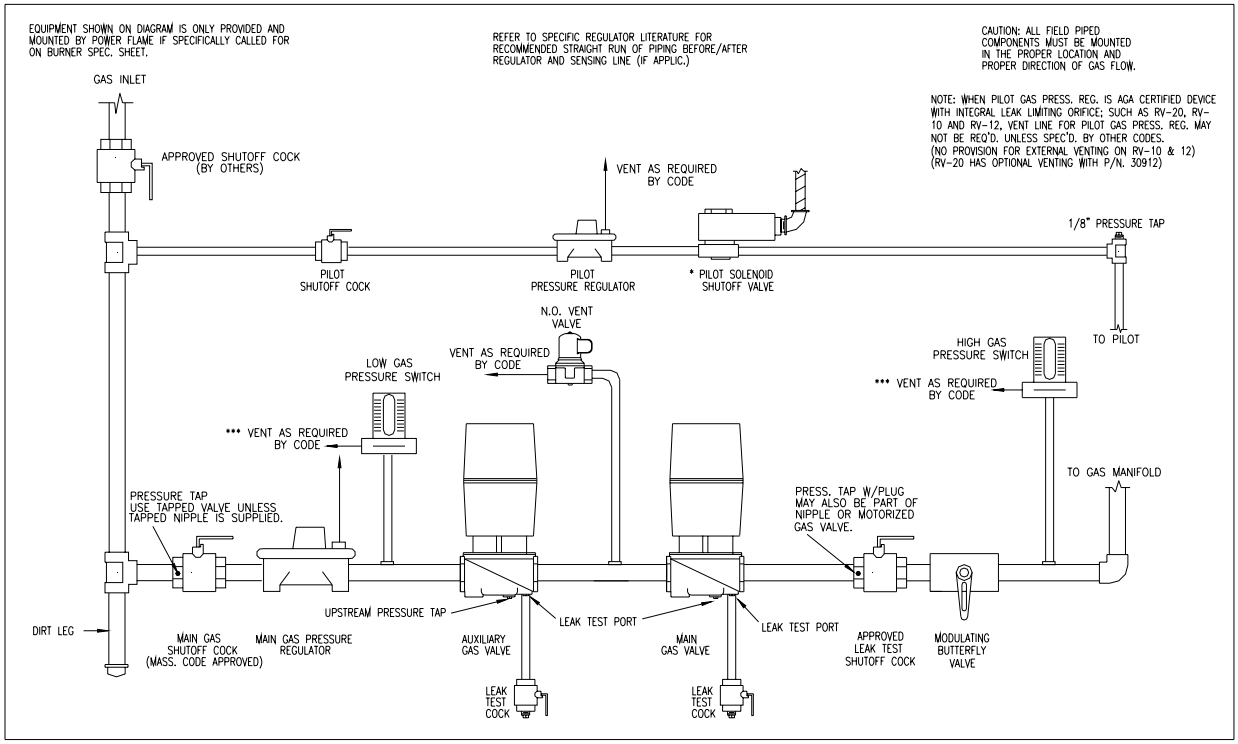

Figure 3: Typical Gas Piping Schematic for Model CM Burner, UL Listed

2.2 Oil Supply Piping

2.2.1 The CM burner is designed for use with light grade fuel oil commercial standard grade #2.

2.2.2 It is recommended that prior to installation all national, local and other applicable codes be reviewed to ensure total compliance.

2.2.3 It is recommended that prior to installation, NFPA-31 and all other national, state, local and other applicable codes be reviewed to ensure total compliance with their requirements including, but not necessarily limited to, the use of anti-siphon valve(s), oil safety valve(s) (OSV), or other acceptable means to prevent siphoning of the oil when tank is above burner level. Even if such devices are not required by code, they should be considered good installation practice and mandatory when the tank is above burner level.

2.2.4 Do not install manual valves in the return line between the pump and the tank unless required by a specific code. If a manual valve is required, an automatic relief valve must be installed across the manual valve to ensure that oil will bypass directly back to the tank in the event the manual valve is inadvertently left in the closed position.

2.2.5 Use copper tubing with flare fittings or iron pipe on all installations. All units must utilize the proper size and type of suction line oil filters (see Table 3 for sizing oil filters).

2.2.6 If the oil storage system has been used with fuel heavier than #2 fuel oil, the entire system should be thoroughly cleaned and flushed before starting up the new system. Utilize fusible link and/or overhead anti-siphon valves as appropriate.

2.2.7 If iron pipe oil lines are used on underground tanks, swing joints utilizing nipples and elbows must be used and joined together, making certain the piping connections are tightened as the tank settles. Keep swing joints in the suction and return lines as close to the tank as possible. Underground tanks should be pitched away from the suction line end of the tank to prevent sediment from accumulating at the suction line entrance. The suction line should be a minimum of 3" from the tank bottom.

2.2.8 Before starting up the system, all appropriate air and oil leak tests should be performed. Make certain that the tank atmospheric vent line is unobstructed.

2.2.9 Refer to Figure 5 for fuel pump oil piping connection information. Further information relating to burner oil piping can be found in Table 3, Figure 4 and Figure 5.

Gas/Oil Model	***Oil Model***	***Suction Capacity (GPH)***
CM9-GO-30	*CM9-O*	*130*
CM9A-GO-30	*CM9A-O*	*220*
CM9B-GO-30	*CM9B-O*	*220*
CM10-GO-30	*CM10-O*	*292*
CM10A-GO-30	*CM10A-O*	*292*
CM10B-GO-30	*CM10B-O*	*292*
CM10C-GO-30	*CM10C-O*	*292*
CM11-GO-30	*CM11-O*	*480*
CM11A-GO-30	*CM11A-O*	*480*
CM12-GO-30	*CM12-O*	*510*
CM12A-GO-30	*CM112A-O*	*510*

Table 3: Oil Pump Suction Capacity Chart

2.2.10 It is very important to properly size the oil suction line and oil filter, to provide fuel flow to the burner without exceeding 10" suction pressure (vacuum) at the oil pump suction port. The method to properly size fuel pump supply line is outlined below (Figure 4).

1) Check oil pump GPH Suction Capacity shown in Figure 4, Oil Line Sizing.
2) Measure total piping length (horizontal and vertical) from the end of the line in the tank, to the connection at the oil pump.
3) Choose the appropriate graph above based on the pipe size. Read up from horizontal line Total Feet of Iron pipe to Suction Capacity in GPH.
4) Read left to the vertical line Inches of Vacuum at Fuel-Unit. (This is the vacuum required to draw oil through the length of pipe selected.
5) If installation has lift (Lift is defined as the vertical distance the fuel unit is above the top of the tank,) add 1" of vacuum for every foot of lift.
6) Add the vacuum determined from items 4 and 5 together to determine total inches of vacuum.
7) If total is over 10", move to next larger pipe size chart and re-calculate total inches of vacuum.

8) The instructions above do not allow for any added restrictions, such as line filter, elbows, sharp bends, check valves, etc.. Suction line vacuum values for such components vary from one manufacturer to another.

9) It is always safe to size the return line from the pump to the tank at the same size as the selected suction line.

10) A Rule of Thumb to determine total vacuum for suction line sizing is to add 10% to vacuum determined from Figure 4 calculations.

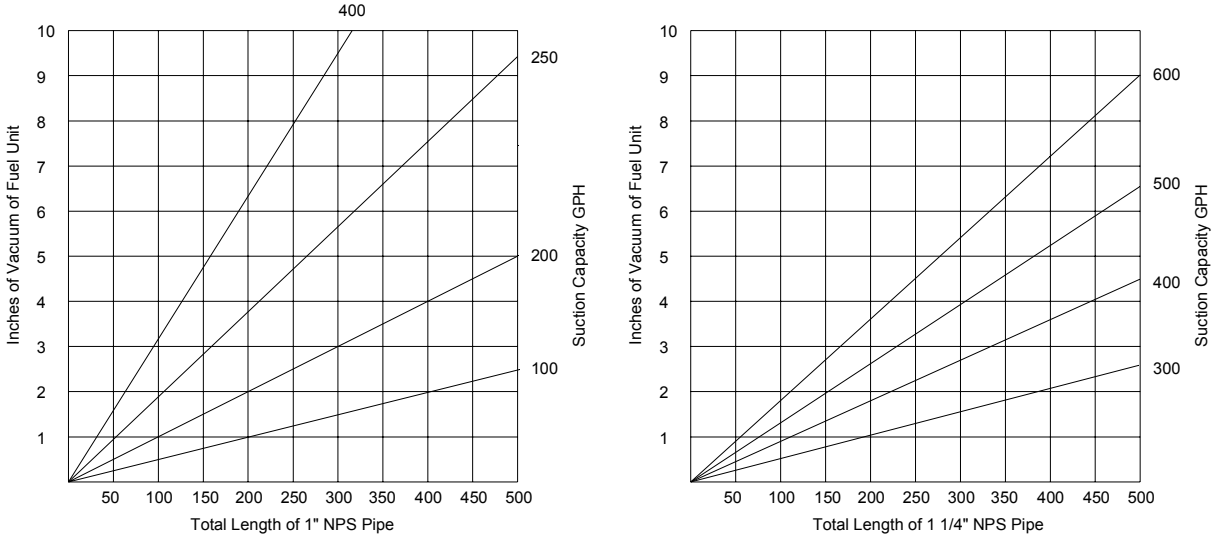

Figure 4: Oil Line Sizing

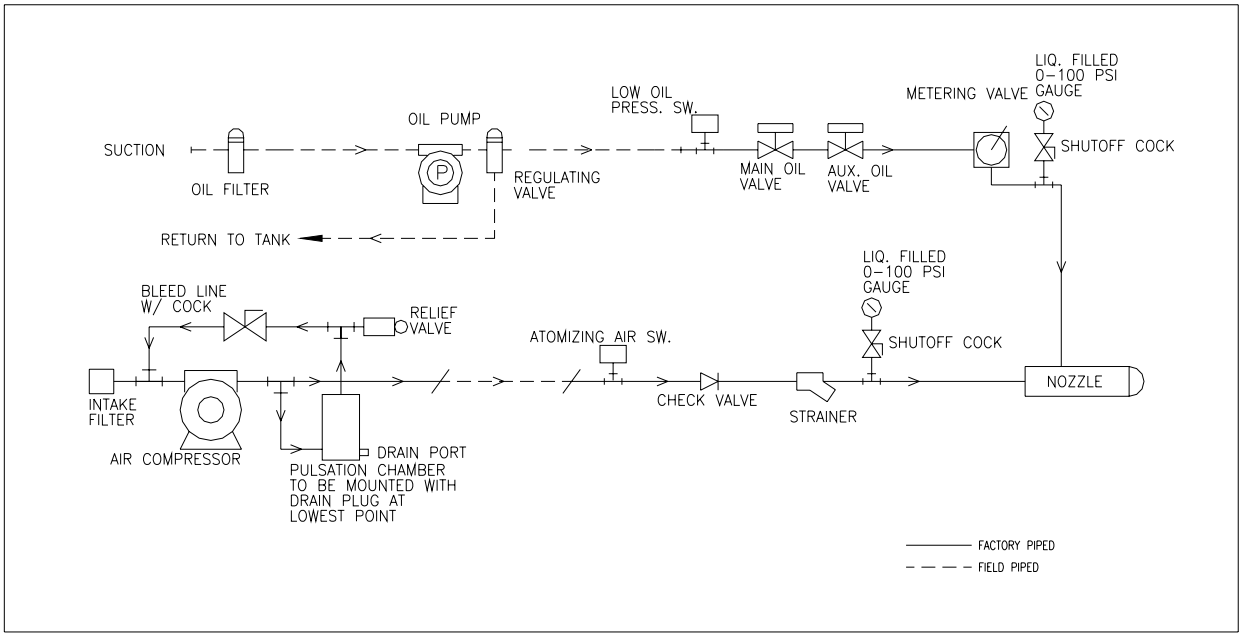

Figure 5: Oil Piping Details

2.3 Combustion Air Requirements

2.3.1 Fresh air required to support combustion, as well as to provide adequate location ventilation, must be supplied. All types of fuel require approximately 10 cubic feet of standard air (sea level at 60°F) per 1000 BTU's firing rate, for theoretical perfect combustion. In actual practice, a certain amount of excess air is required to ensure complete combustion, but this can vary substantially with specific job conditions.

2.3.2 Additional air is lost from the boiler room through barometric dampers, draft diverters and similar venting devices. It is generally accepted that ½ square inch of free air opening (for each gas or oil burner in the room) per 1000 BTU/hr firing rate will be adequate. Under no circumstances should a boiler room be under negative pressure. Jurisdictional authority relating to combustion air and boiler room ventilation requirements vary widely. In order to make certain compliance, the controlling authorities should be consulted.

2.4 Burner Mounting: General

2.4.1 Provisions should be made to provide adequate space around the burner and associated equipment to allow for ease of inspection, maintenance and service.

2.4.2 Observe codes for the minimum clearances to combustible materials.

2.4.3 Provide a suitable burner front plate, consisting of a steel plate of ample thickness to support the weight of the burner and hold it firmly in alignment with the heat exchanger. The front plate must be protected from heat using high temperature refractory. The refractory (burner quarrel) must be formed as shown below in Figure 6.

2.4.4 The burner mounting flange must be securely attached to the front plate with suitable gasket or non-asbestos, high temperature rope packing to prevent any products of combustion from escaping from the combustion chamber through the burner-boiler mounting flanges. The burner assembly must be supported at the base of the housing to prevent undue strain on the front plate. (A mounting pedestal is furnished for this purpose.)

2.5 Combustion Chamber: General

2.5.1 Combustion chambers shall be provided as recommended in Chamber Dimension Charts and should be constructed of high temperature refractory, in the form of firebrick or rammed plastic refractory, backed by suitable heat insulating material.

2.5.2 Certain types of heat exchangers, such as warm air furnaces, some hot oil heaters, wet base steel and cast iron packaged firebox boilers and Scotch Marine boilers, use the combustion chamber to transfer heat and therefore do not require refractory of other insulation. If in doubt, consult the heat exchanger equipment manufacturer.

2.5.3 All possible points of air infiltration or ex-filtration must be sealed. If the unit is to be fired under positive combustion chamber conditions, extreme care must be taken to ensure that a 100% seal is maintained. The Model CM burner is designed to provide all the air required for complete and efficient combustion. Entry or loss of air from sources other than the firing unit will decrease its' overall combustion and operational efficiency.

BHP	Min. Inside Dimension
300	34”
350	34”
400	38”
450	38”
500	38”
600	42”
700	45”
800	45”
900	50”
1000	50”
1200	54”
1500	54”

Table 4: Scotch Marine Boiler Minimum Furnace Tube Inside Dimensions

2.5.4 Note: The above dimensions are recommended minimums. If boiler dimensions are less than indicated, consult with the factory.

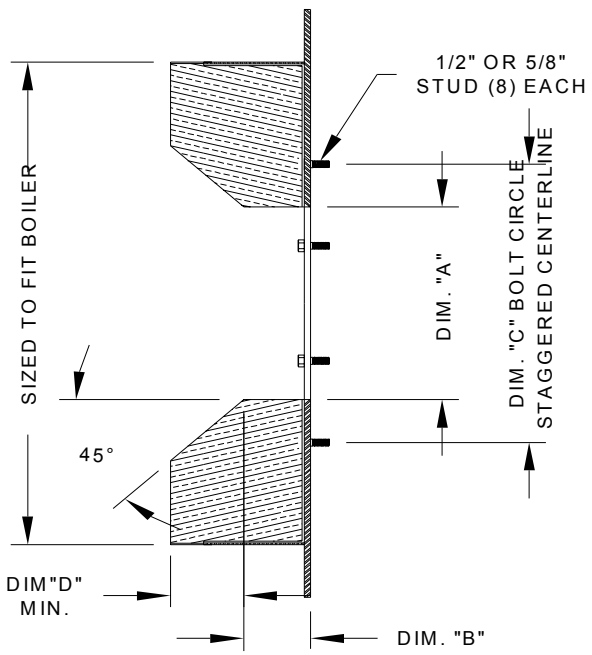

	CM9 - CM10A	CM10B - CM10C	CM11 - CM11A	CM12 - CM12A
DIM. "A"	13-3/4"	15-3/4"	17-5/8"	19-5/8"
DIM. "B"	4"	5"	6"	7"
DIM. "C"	21-1/2"	21-1/2"	23-3/8"	25-3/8"
DIM. "D"	4"	4"	4"	4"

Figure 6: Burner Quarrel Dimensions

3. START UP PROCEDURES

3.1 Burner Start Up and Service Test Equipment Required

3.1.1 The following test equipment is required to ensure proper start up and adjustment of burner equipment to obtain maximum efficiency and reliability of operation.

3.1.2 See Figure 7 for CO_2 versus O_2 Curves. These curves correlate the relative values of O_2 and CO_2 for the fuels listed, as well as the percentage of excess air at given O_2 and CO_2 values.

3.1.3 Equipment required:

For any fuel:

- O_2 analyzer (Required)
- CO_2 indicator (Optional)
- Stack thermometer
- Draft gauge or inclined manometer
- Combination volt/ammeter
- DC Micro-ammeter or DC Voltmeter, as required by Flame Safeguard programmer

For gas:

- CO indicator
- U-Tube manometers 0-16" W.C.
- Calibrated pressure gauges 0-35" W.C. and 0-5 PSIG (Higher pressure ranges may be necessary depending upon gas inlet supply pressure)

For Oil:

- Compound vacuum/pressure gauge for pump suction side (-30" to 30" W.C.)
- 0-100 PSIG oil pressure gauge (two required for atomizing pressure and oil pressure)
- 0-400 PSIG gauge for pump pressure
- Smoke tester

3.1.4 Note: When firing gas fuels, it is possible to attain CO_2 readings that appear to be acceptable (i.e., 8%, 9%, 10%, etc.) while actually producing an unsafe condition. At such CO_2 readings, a deficiency of air will create the formation of CO (carbon monoxide) in the flue gases. Therefore, when firing gas or oil, always measure O_2 and test for CO to make certain that the burner is adjusted so that it has an excess, rather than a deficiency, of air. CO is a dangerous product of incomplete combustion and is associated with combustion inefficiency and increased fuel cost. CO readings on any fuel should be near 0%.

3.2 General Start-Up All Fuels

3.2.1 A thoroughly qualified burner technician must be employed to provide the initial burner start up, as well as any subsequent servicing of the burner and related controls.

3.2.2 A representative of the owner and/or the person or persons responsible for operating and maintaining the unit should be present during the initial start up. A service representative may also be required by the local utility on gas-fired equipment. Instructions regarding the proper care and maintenance of the unit should be outlined with these people present.

3.2.3 Before initiating start up, the start up technician should thoroughly study and become completely familiar with the exact sequence of operation and all other details of the specific flame safeguard control system being used. This information will be found in bulletins printed and supplied by Honeywell, Fireye, or Siemens. A copy of this bulletin is supplied with the burner.

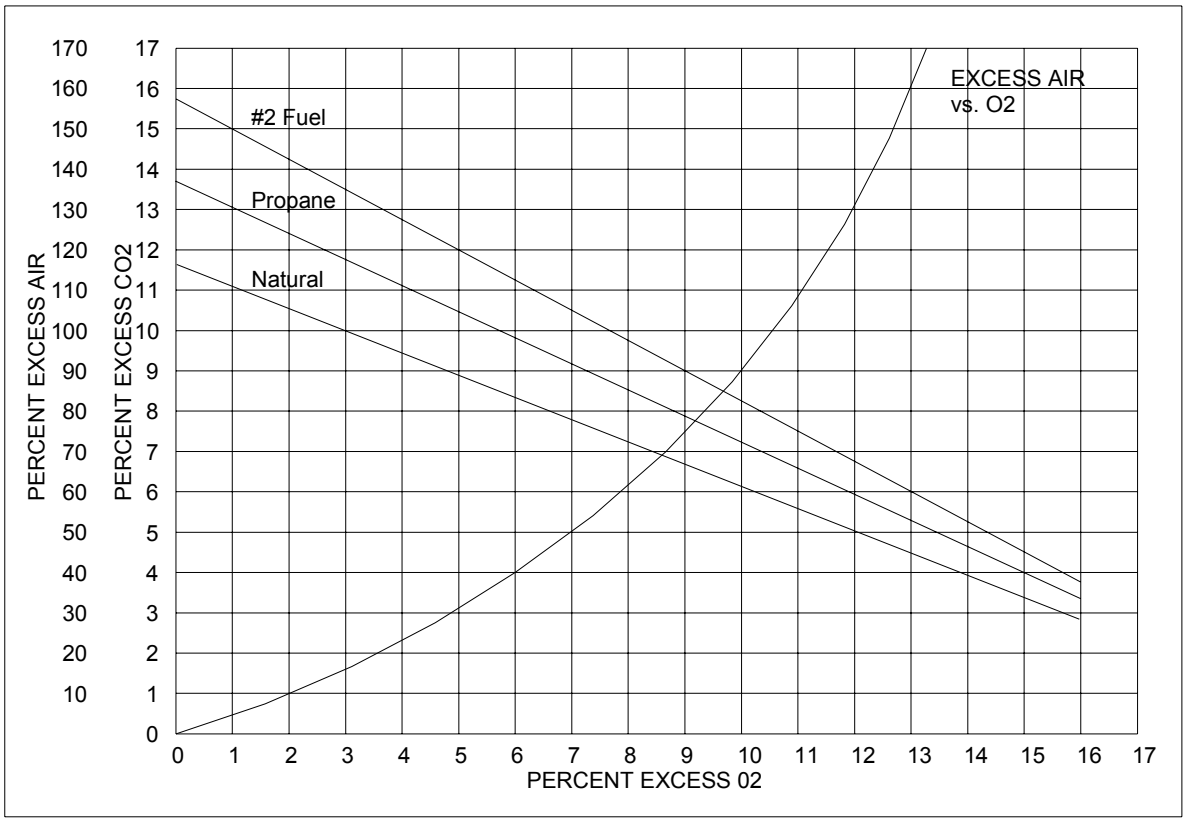

Figure 7: CO_2 versus O_2

3.2.4 Also, refer to Figure 8 for burner head adjustment details. As shown, there are four adjusting rods located inside the burner head which are reached through the access cover or port. These rods can be adjusted to vary the gas ratio between the diffuser and outer gas annulus. Turning the adjusting rods clockwise will reduce the gas flow to the outer gas annulus. The normal setting as shipped from the factory is 1 ½ turns back (counter-clockwise) from the full forward position. The gas distribution may be changed to improve overall performance on individual boiler/heat exchangers. However, the counter-clockwise adjustment should not be made so far back as to lose flame retention on the diffuser. When adjustments are made, turn rods only ½ turn each at a time to avoid jamming. After the burner is mounted and all wiring and piping has been completed, tested and determined to be correct, the following procedures are recommended:

3.2.5 For combination gas/oil units; the gas side operation should be set up first to clock the gas meter, allowing precise gas inputs to be determined. Once the gas operation is complete, the oil side can be set up easily by correlating the O_2 values of the two fuels.

3.2.6 If it is anticipated that the gas/oil burner will infrequently run on oil; it is recommended that the nozzle gun assembly be pulled back by approximately 1" when firing gas and returned to the original position when required for oil firing. Be certain on initial start up that the pump is adequately primed to prevent against mechanical seizure caused by lack of oil. The pump warranty will be voided if the pump is run without adequate oil supply.

3.2.7 Make a general inspection of the equipment room to ensure that the installation is complete. Check piping, controls, wiring and etc.

3.2.8 Close main and checking gas cocks. Open suction line manual oil valves and others as appropriate.

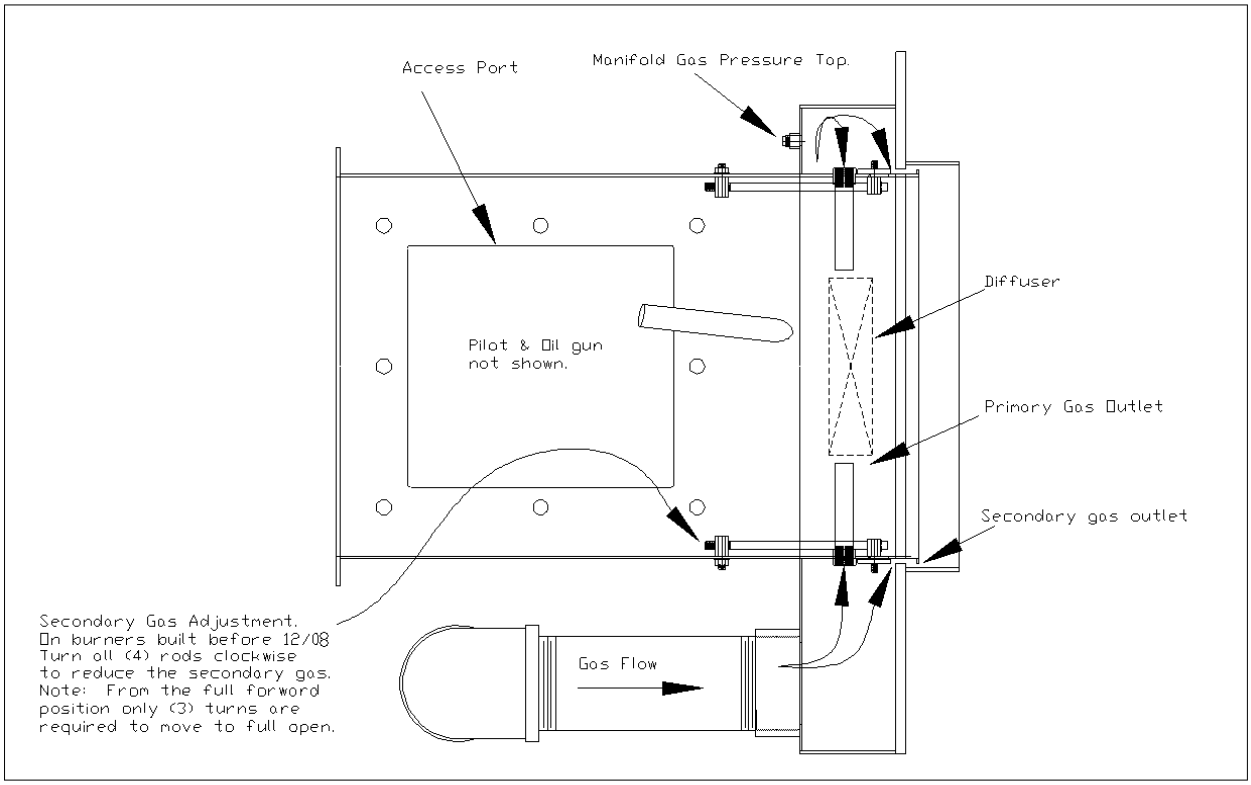

Figure 8: Burner Head Adjustment Details

3.2.9 Tighten all screws on terminal blocks in control cabinet in case some may have loosened in shipment.

3.2.10 Check fuses in main panel (if supplied) and in burner control cabinet. Check wiring to the burner control cabinet for compliance with the wiring diagram and local codes. Determine that voltage supply is correct to motor starter line connections and to control circuit line connections. If a control circuit transformer is supplied, make certain its primary voltage matches the line voltage being supplied. (A 230 volt transformer does not produce proper control voltage when supplied with 208 volts).

3.2.11 Check breaching and stack to ensure that they are open and unobstructed.

3.2.12 Check blower (and oil pump motor, as applicable) rotation by momentarily making contact of the motor starters. Proper rotation is imprinted on the fan housing and (if supplied) the remote oil pump set assembly.

3.2.13 Check operating controls, limit controls, low water cut-off, flame safeguard control reset, high and low gas pressure switches (if used), low fire interlock switch (if used) and all other applicable interlocks. All contacts should be closed (an exception will be found on jobs using the low gas pressure switch; this switch should be open until the main gas cock is opened). If a low oil pressure switch is used, its contacts will remain open until the oil pump is running and the low oil pressure cut-in point is reached.

3.2.14 Do not repeatedly recycle the burner, as to allow any unburned fuel in the combustion chamber to collect. Allow 5 minutes between recycles.

3.2.15 Specific instructions relative to component sequencing are provided in the flame safeguard manufacturer's bulletin which is included with the documentation shipped with the burner.

3.2.16 Proper test equipment must be used in order to achieve maximum system operational reliability and fuel efficiencies. See page 15 for equipment lists.

3.2.17 All fuel/air adjustments should be made to achieve required input rate, satisfactory combustion test values, flame stability and appearance.

3.2.18 When firing gas see Figure 9, Figure 10, Figure 11, and Figure 12, "Manifold Pressure versus Firing Rate", to obtain the approximate manifold pressure for a specific firing rate.

3.2.19 Every new burner startup should employ the use of the Burner Start Up Information and Test Data sheets on page **Error! Bookmark not defined.**.

3.2.20 The gas system uses two motorized gas shutoff valves to control the on/off flow of the gas. The oil system employs two oil solenoid valves to control the on/off flow of oil to the oil nozzle. A modulating motor controls the positioning of a butterfly type Gas Proportioning Valve while a V ported metering oil valve provides the modulating function in the oil nozzle line. The modulating motor also controls the positioning of the combustion air dampers, through appropriate sequencing – providing low fuel/air input for a smooth low fire start and a near infinite number of fuel/air positions between full low and high fire.

3.2.21 When firing gas the oil metering valve will open and close because it is linked to the modulating motor, however, the oil solenoid shutoff valve remains closed, and no oil is allowed to flow to the nozzle. Similarly, when firing oil, the butterfly gas valve will open and close because it is linked to the modulating motor, however, the main automatic gas supply safety shutoff valves remains closed, so no gas is allowed to flow to the burner head.

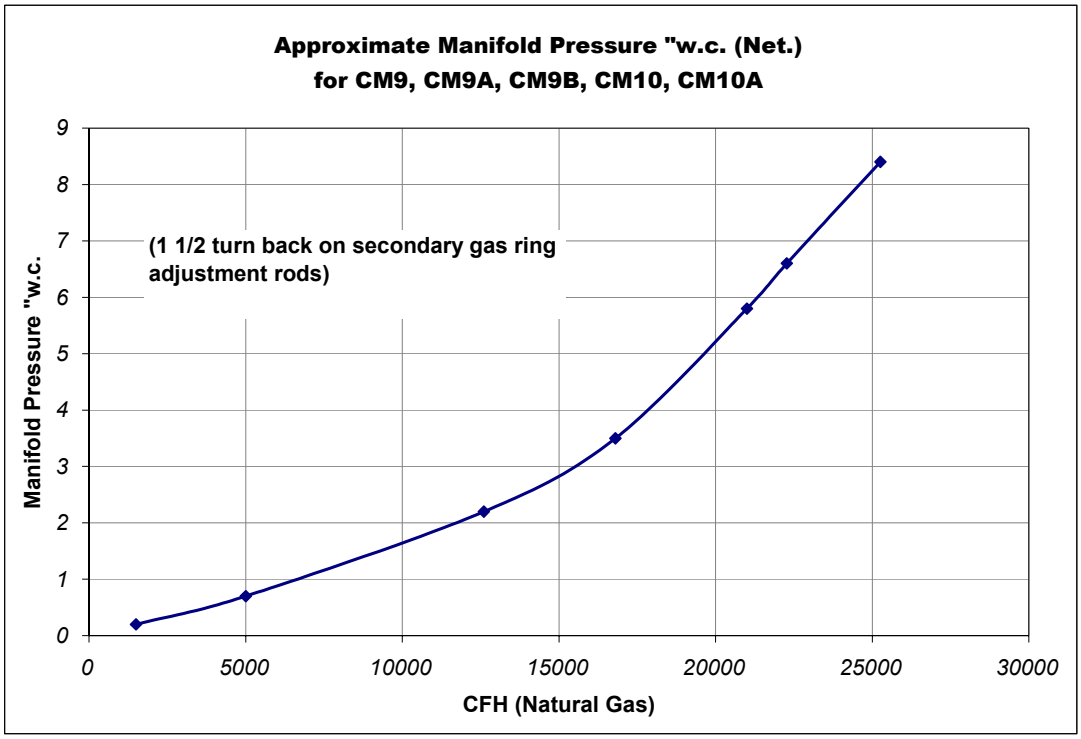

Figure 9: Manifold Pressure versus Firing Rate for CM9, CM9A, CM9B, CM10, and CM10A

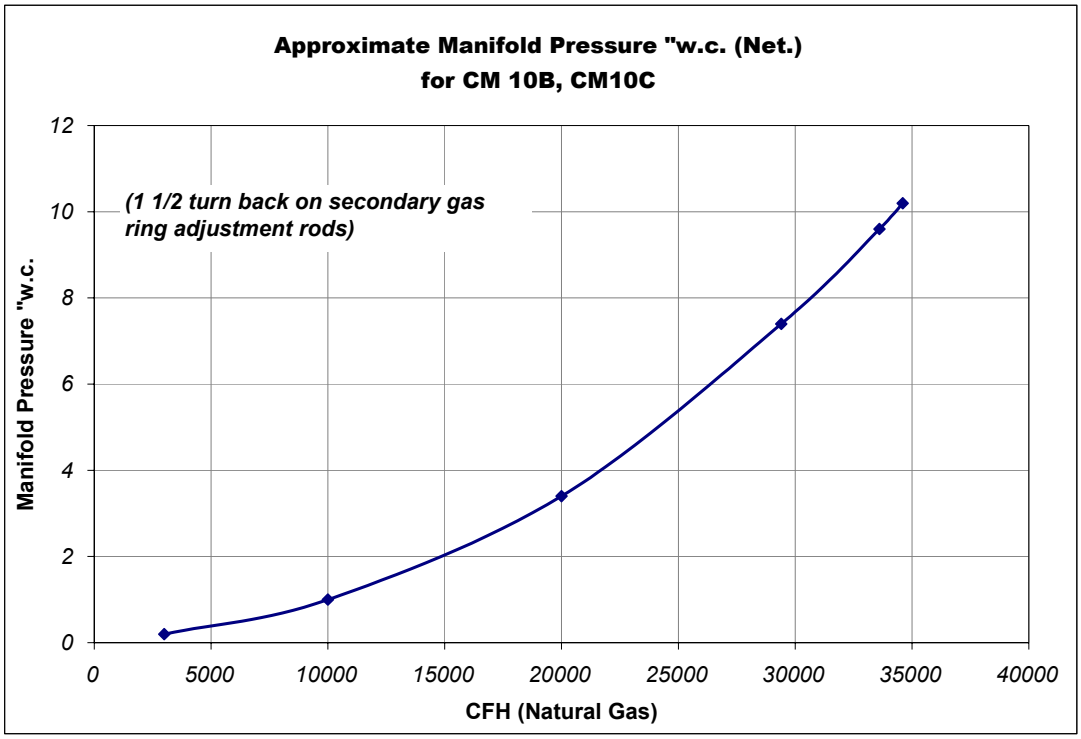

Figure 10: Manifold Pressure versus Firing Rate for CM10B and CM10C

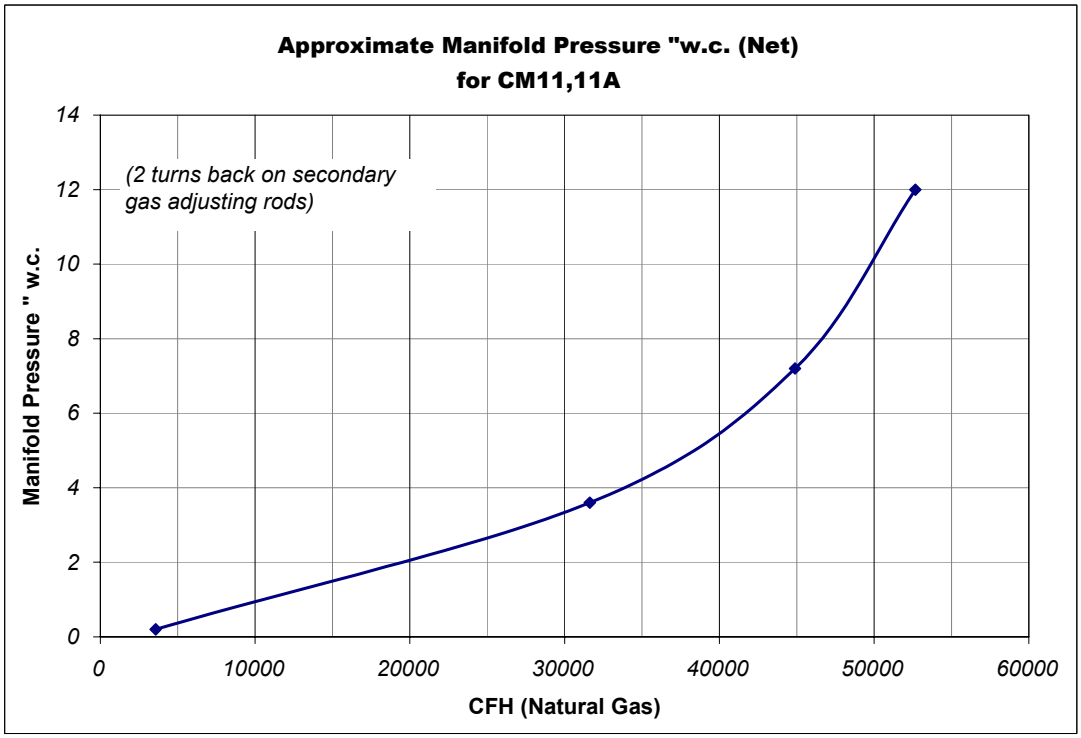

Figure 11: Manifold Pressure versus Firing Rate for CM11 and CM11A

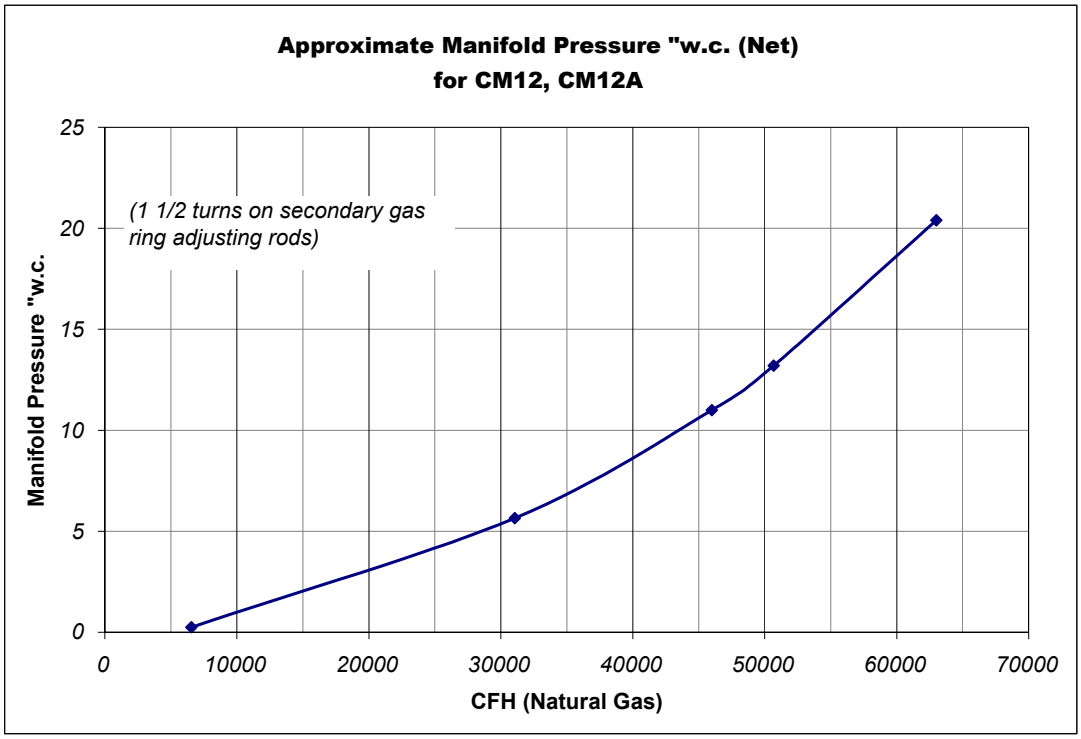

Figure 12: Manifold Pressure versus Firing Rate for CM12 and CM12A

3.3 Burner Start-Up Sequence Instructions: Gas

3.3.1 Prior to burner start up – contact the local gas company to determine if any correction factors have to be applied to their indicated meter flow rates. This information is important as relates to achieving specific heat exchanger BTU/HR inputs.

3.3.2 Refer to the gas piping diagram furnished with the burner. Check gas piping, controls and valves for leaks and compliance with codes.

3.3.3 Check all linkages for proper position and tightness. If the system is a packaged burner/heat exchanger system, the linkage may have been properly set when the system was test fired at the heat exchanger manufacturer's factory. It should, however, be checked to ensure that it was not damaged in shipment. On conversion units (where the burner and heat exchanger are mated in the field), the linkage will have to be set to suit the particular operating conditions.

3.3.4 Remove the pilot assembly and check for proper settings of the spark gap, tightness or electrode in its bracket and firm connections of the electrode cable (see Figure 13 for pilot details).

3.3.5 Close main checking and pilot gas cocks. Install one gas pressure gauge to read burner firing manifold pressure (use 0-16" W.C. gauge or a manometer). See Section 3 for pressure sensing locations. Install a second gas pressure gauge to read gas supply pressure between the main gas cock and the inlet to the main gas pressure regulator (use a 0-5 psi gauge or as appropriate). If there is no tapping in this location, install a tee at the point where the pilot gas supply is connected to the main gas line. Slowly open the main gas cock in order to determine that the incoming gas pressure is within the specified limits of the main and pilot gas pressure regulators, automatic fuel valves and gas pressure switches.

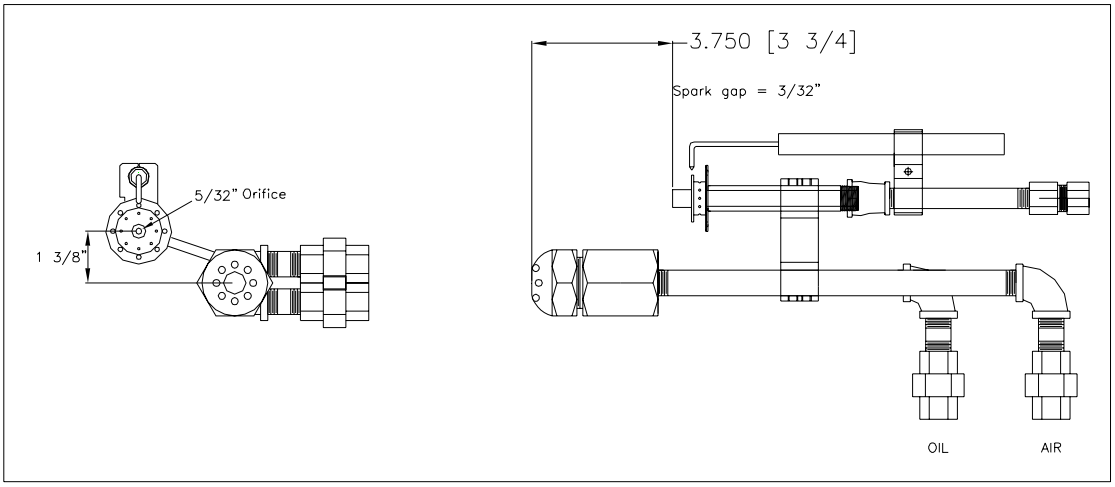

Figure 13: pilot/gun details

3.3.6 Disconnect pilot line at inlet to the pilot gas pressure regulator and purge air from the pilot gas line. Purging of gas lines must be done in accordance with NFPA 54 of the National Fire Protection Association's National Fuel Gas Code. After the air is purged from the gas supply system, close the pilot cock and reconnect the pilot line. Leave the pilot cock closed.

3.3.7 Install required system measuring devices: a) appropriate flame signal meter to the flame safeguard control; b) manometer (or 0-10" W.C. gauge) in the pilot test tee port; c) stack thermometer and CO_2 or O_2 sample line to the breaching; and d) draft gauge to the combustion chamber test point.

3.3.8 It is strongly recommended that an automatic gas valve bubble leak test be performed in accordance with the gas valve manufacturer's instructions on every new installation and periodically afterwards in order to ensure that the valve is functioning according to the manufacturer's specifications. It is also suggested that the test be conducted during a normal pre-purge burner operation. This test will reveal any problems that relate to incorrect wiring of the automatic gas valve that could cause premature energization of the valve.

3.3.9 Set the air dampers zero to 1/8" open, and with both pilot and leak test gas cocks closed, open the main gas cock (to allow the low gas pressure switch, if supplied, to make its circuit). With the control switch in the Off position, apply power to the burner through the main burner disconnect switch. Switch the burner panel On/Off switch to the On position momentarily to determine that the blower rotation is correct.

3.3.10 Re-start the burner. With the pilot gas cock closed, the burner will go through a blower pre-purge period, after which the gas pilot ignition transformer will be energized, although no pilot will be established. (At no time should there be any flame signal reading, nor should the main gas valve attempt to open.) At the end of the pilot trial for ignition and blower purge period, the flame safeguard control should shut the system down in a safety lockout mode, requiring manual reset of the flame safeguard control to restart the burner.

3.3.11 Wait three minutes, reset the flame safeguard control safety switch (restarting the burner) and open the pilot gas cock. When the blower pre-purge period ends and the burner is energized – if the flame safeguard control has a test/run switch – flip the switch to the test position while the pilot is on and make adjustments as required. The typical pilot pressure is 2.5 to 4.0" W.C. for the CM9, 9A, 10, and 10A, and 4.0 to 8.0" W.C. for the CM10B and larger. See page 35 for pilot ignition adjustments. Recycle the burner several times to make certain pilot operation is reliable.

3.3.12 With pilot adjustments completed, reset the switch to the Run position, which will allow the sequence to proceed to the automatic gas valve energizing position.

3.3.13 When the main automatic gas valve begins to open, slowly open the checking gas cock to light off the main flame. The main flame should light immediately. If not, it may be necessary to eliminate air from the main gas line and/or adjust main gas pressure regulator flow rates.

3.3.14 Adjust the burner as necessary to provide smooth ignition of the main flame. If the flame signal drops significantly when the main automatic gas valve opens, slightly increase the pilot gas pressure to attain a stable flame signal value.

3.3.15 Intermittently operate the burner until the water is warm in the boiler, or follow specific initial firing recommendations provided by the heat exchanger manufacturer.

3.3.16 Refer to paragraph 3.3.27 and 3.3.28 carefully for recommended limit control and other control devices operational checkout.

3.3.17 Initial adjustments should be made at the low fire position. All Power Flame burners are factory tested and adjusted. However, to determine that the metering butterfly valve is, in fact, in the low fire position, observe the end of the metering valve shaft. The slot in the end of the shaft indicates the position of the valve. When the slot is in the horizontal position (parallel with the gas flow direction), the valve is fully open.

3.3.18 Tighten (finger tight) the hex bolt to the linkage rod at the swivel on the modulating motor driver arms and run the motor through its full travel to ensure that the linkage is free and that limits on the metering device and air dampers are not exceeded.

3.3.19 Turn the burner on and let it advance to the main flame light off position. Take action as necessary to hold the linkage at the low fire position by using a manual potentiometer or electrically disconnecting the modulating motor. Power Flame burners are tested at the factory and linkage adjustments for modulation are made at that time. Note that the factory settings relate to good operation while firing into open test pits, and therefore will normally not relate directly to absolute fuel/air ratios while firing under specific field conditions. It is suggested that the factory settings be noted and marked on the linkage prior to proceeding with final adjustment. In this manner those settings can be restored as initial reference points, if need be.

3.3.20 With the burner in the factory set low fire position, adjust air and fuel linkage to good fuel/air ratio low fire settings (5 –8% O_2 and little or no CO). Mark the linkage at the new settings.

3.3.21 Increase the firing rate to the midway point. Set the fuel/air ratios to achieve good combustion values (3 - 5% O_2 and little or no CO). Mark the linkage as a reference point for this new mid fire position.

3.3.22 Increase the rate to high fire position and repeat the test done for the mid point adjustment. Results should range in the area of 3% to 5% O_2 with little or no CO. The metering device setting and air damper openings should be marked and noted to obtain high fire reference points. Note that an additional point of fire adjustment may be obtained by modifying the regulated gas pressure delivered to the burner metering device. The burner pressure regulator is used to obtain this adjustment and can be used within available pressure limits to obtain optimum firing conditions.

3.3.23 Operate the modulating lever arm on the modulating motor through the three previously referenced points. Minor setting modifications may be required to ensure that the reference points are acquired.

3.3.24 Determine that the required gas input rate is being achieved by clocking the gas flow at the gas meter. The gas utility should be consulted to determine if any correction factors have to be applied to the indicated meter flow rates.

3.3.25 Intermittently operate the burner until the water is warm in the boiler, or follow specific initial firing recommendations provided by the heat exchanger manufacturer.

3.3.26 Tighten all linkages and permanently mark settings.

3.3.27 Limit control check should be made as follows:

1) Permit the burner to run until the limit control settings have been reached.
2) The burner should turn off when the set temperature or pressure has been reached. Set the controls so that the burner will go to the low fire position before the operating limit control turns the burner off.
3) After a differential pressure or temperature drop, the burner should re-start automatically.
4) With the unit running normally, open the blow down valve and remove water to the point below the Low Water Cut Off setting. The burner should turn off and re-start automatically when the proper water level is re-established. (If a manual reset type Low Water Cut Off is used, it will have to be reset).

3.3.28 Set and check operation of Low and High Gas Pressure Switches. See gas pressure switch manufacturer's instructions for detailed procedures. Units with mercury switching device must be properly leveled. For initial start up, once the burner's normal operational gas pressure has been set, adjust the low and high gas pressure switches as follows:

1) Low Gas Pressure Switch: with the burner running, slowly close the main gas train manual shutoff cock and adjust the switch to open its circuit when the pressure falls below its normal value. The burner will shut down. Open the manual gas shutoff cock to the full open position and manually reset the Low Gas Pressure Switch. The burner will re-start.
2) High Gas Pressure Switch: with the burner running, adjust the switch to a point where the switch opens its circuit. The burner will shut down. Manually reset the switch and re-adjust the cutout point to be made at the normal operating pressure, but to open as the pressure goes slightly above normal.

3.3.29 Check all burner and heat exchanger controls and operating devices.

3.3.30 Check Blower Combustion Air Flow Switch:

1) Shut burner power off.
2) Disconnect both wires at the air flow switch and temporarily clip them together. Make sure that they cannot ground against anything, since they will be powered with 110 volts during the test.
3) Put a continuity meter across the common and normally open terminals on the air switch.
4) Close the gas train checking cock.
5) Start the blower motor. The meter should read electrical continuity as soon as the blower starts.
6) Disconnect the wire which energizes the coil of the motor relay (starter), or open the main power disconnect switch to the burner. Within 3 to 4 seconds after the blower motor is de-energized, the meter should indicate an open air flow switch circuit (no continuity).
7) If the switch does not open in 3 to 4 seconds, re-adjust accordingly. Turn the air flow switch adjustment screw clockwise to shorten cut-off response time and counter-clockwise to lengthen cut-off response time.
8) Turn the burner power off. Remove the shorting clip from the two disconnected wires and let them hang loose (they will be powered with 110 volts, so don't let them ground out).

9) Open the gas train checking cock. Turn the burner on. With the wires disconnected, the burner should go into a purge cycle, although neither the ignition nor the main fuel valve circuits will be energized. If they do energize, there is a wiring problem. Correct as required.

10) Turn power off. Reconnect the air flow switch wires to the air flow switch terminals. Place burner back into normal operation.

3.3.31 The Owner's Operating Instructions, at the end of this manual, should be posted in a clearly visible location close to the burner.

3.3.32 If the burner operation is abnormal, refer to Section 19, Trouble Shooting Suggestions, as well as trouble shooting information included in the flame safeguard manufacturer's bulletin shipped with the burner. It is also strongly suggested that all test procedures outlined in the flame safeguard control manufacturer's bulletin be conducted.

3.3.33 Complete the Burner Start-up Information and Test Data sheets on pages 43.

3.4 Burner Start-Up Sequence Instructions: Oil

3.4.1 Power Flame Model CM oil burners are of the air atomizing forced draft type.

3.4.2 Check oil and gas piping (if applicable) for leaks and check all controls for compliance with codes and insurance requirements.

3.4.3 Check all linkages.

3.4.4 Install oil pressure and vacuum gauges. See Figure 5 for mechanical operation and oil and air pressure gauge location for the system. Check suction line to be sure manual valve is open and that any check valves are opening in the proper direction of oil flow. Check oil filter for tightness. There should be no manual valve in the return line from pump to tank. Refer to Figure 14 for the approximate nozzle oil pressures for a specific firing rate. The corresponding atomizing air pressures will typically be 1 to 5 psi lower than the oil pressure at high fire. At low fire the atomizing air pressure will typically be 5 to 10 psi higher than the oil pressure.

3.4.5 Gas Pilot Oil Ignition. Remove the pilot assembly and check for the proper setting of the ignition electrode spark gap. Install a manometer or 0-10" W.C. gas pressure gauge in the pilot gas pressure test port. See pages 20 for details on gas pilot adjustments. Disconnect the pilot gas line at the inlet to the pilot gas pressure regulator and bleed air out of the pilot line. Make certain that the gas pressure to the pilot regulator does not exceed the regulator or pilot solenoid valve rating. When bleeding air from the pilot line system, do not allow the venting of gas into the room.

3.4.6 Install required systems measuring devices:

1 Appropriate flame signal meter to the flame safeguard control
2 Stack thermometer, 0_2 and CO_2, and Smoke Test sample line in the breaching
3 Draft gauge to the combustion chamber test point

3.4.7 With the burner panel control switch in the Off position, apply power to the burner through the main burner disconnect switch. Switch the burner panel On/Off switch to the On position momentarily to determine that the blower motor, compressor motor and oil pump set motors are running in the right rotation.

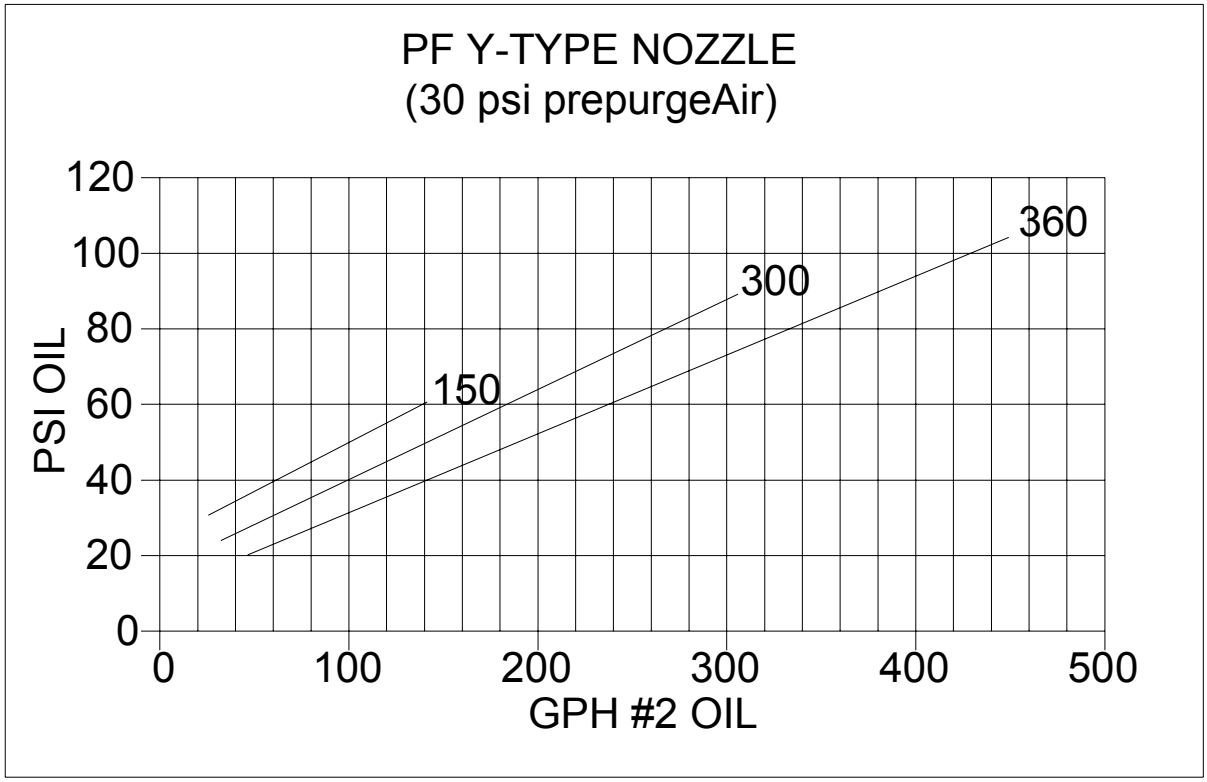

Figure 14: Pressure/Flow Curve for PF Y-Type Nozzles

3.4.8 Appropriate steps must be taken to transfer the oil from the tank to the burner. It is imperative that the system be primed prior to operation. The system priming may be achieved by closing the manual valve in the oil suction line and priming the oil pump through the pump gauge pressure port. Priming can also be accomplished through the oil filter on the suction line, if it is of the removable top type. When replacing the oil filter cap, be sure to attain a vacuum tight seal. Start the burner with the suction line manual valve closed. Let the burner run until the vacuum gauge indicates a high vacuum, then quickly open the manual valve in the suction line. This combination of priming and high suction should pull the oil from the tank to the burner, provided that there are no leaks and the line is properly sized (see Figure 4 for proper line size).

3.4.9 Refer to the burner wiring diagram and flame safeguard control information supplied with the burner to determine the specific firing sequence relating to limit and interlock circuits.

3.4.10 Set the air damper approximately zero to 1/8” open and start the burner. The ignition circuit will be energized after the blower pre-purge period has been completed and all limit and other interlock circuits have been closed. Allow the pilot time to come on and adjust it for proper ignition and flame signal. For flame safeguard controls having a Test/Run test switch, place the switch in the Test position, causing the ignition timing sequence to stop while air and gas pressure adjustments are being made. See pages 20 for details on gas pilot ignition adjustments.

3.4.11 Cycle the burner several times to make certain the pilot is operating reliably. Shut the pilot gas cock and cycle the burner through pre-purge. With the gas shut off, the pilot valve and ignition transformer will energize, but there will be no pilot and the unit will shut down on safety lockout.

3.4.12 There should be no evidence of a flame signal reading, nor should the main oil solenoid valves attempt to open.

3.4.13 When a Gas Pilot is used to ignite the main oil, there will be a period of time when only the pilot will be on. The flame scanner must first detect the pilot and then, in a given number of seconds, the main oil solenoid valves will be energized.

3.4.14 When the compressor is running a pressure will be indicated on both the air and oil pressure gauges.

3.4.15 Once the main solenoid oil valves are energized, the oil flame should be established immediately. If not, shut the system down and make corrections as required. Do not repeatedly recycle the burner, such as to allow any accumulation of unburned fuel in the combustion chamber.

3.4.16 Intermittently operate the burner until the water is warm in the boiler, or follow specific initial firing recommendations provided by the boiler or heat exchanger manufacturer.

3.4.17 See paragraph 3.4.29 and 3.4.30 in this section for recommended limit control and other control devices operational checkout.

3.4.18 After completing procedures as appropriate in the above paragraphs, proceed with modulating adjustments as follows:

3.4.19 Tighten (finger tight) the hex bolt to the linkage rod at the swivel on the modulating motor driver arms, and run the motor through its full travel to ensure that linkage is free and that the limits on the metering device and air dampers are not exceeded.

3.4.20 The modulating motor is connected by linkage to the air inlet dampers and a fuel metering valve which controls the fuel input from low to high fire. Each control point has its own multi position arm, so that proper air/fuel ratios can be achieved throughout the entire firing range. Initial adjustments should be made at the low fire position (low fuel/air flow). All Power Flame burners are factory fire tested. However, to determine that the metering valve is, in fact, in the low fire position, observe the pointer on the metering valve shaft. The pointer must be near the closed position pointing toward the #1 or #2 on the dial of the Hauck valves. As the burner runs from low to high fire, it will proceed from the low fire setting toward the open position on the dial.

3.4.21 Turn the burner on and let it advance to the main flame light off position, taking action as necessary to hold the linkage at the low fire position by using a manual potentiometer. Power Flame burners are test fired at the factory and linkage adjustments for modulation are made at that time. Note that the factory settings relate to good operation while firing into open test pits and will therefore not normally relate directly to the absolute fuel/air ratios while firing under specific field conditions. It is suggested that the factory settings be noted and marked on the linkage prior to proceeding with final adjustment. This will allow a return to those settings as initial reference points, if need be.

3.4.22 With the burner in the factory set low fire position, adjust air and fuel linkage to good fuel/air ratio low fire settings (5 - 8% O_2 and #0 to #2 smoke reading). Mark the linkage as a reference point for this new low-fire position.

3.4.23 Verify that the bleed valve on the atomizing air compressor is closed. Normally under reduced firing rate conditions the bleed valve is used to bleed off excess atomizing air from the nozzle. However, it may be necessary to bleed off excess atomizing air to obtain rate/good combustion at the higher rates.

3.4.24 Increase the firing rate to the midway point. Set the fuel/air ratios to achieve good combustion values (4 - 6% O_2 and #0 to #2 smoke reading). Mark the linkage as a reference point for this new mid-fire position.

3.4.25 Increase the rate to the high fire position and repeat the tests done for the mid-point adjustment. Results should be in the area of 4 1/2% O_2 and no more than #2 smoke. The metering device setting and air damper openings should be marked and noted to obtain the high fire reference points.

3.4.26 Operate the modulating lever arm on the modulating motor through the three previously determined reference points. Minor setting modifications may be required to ensure that the reference points are acquired.

3.4.27 Intermittently operate the burner until the water is warm in the boiler, or follow specific initial firing recommendations provided by the heat exchanger manufacturer.

3.4.28 Tighten all linkages and permanently mark settings.

3.4.29 Limit control check should be made as follows:

1. Permit the burner to run until the limit control settings have been reached.
2. The burner should turn off when the set temperature or pressure has been reached. Set the controls so that the burner will go to the low fire position before the operating limit control turns the burner off.
3. After the differential pressure or temperature drop, the burner should start automatically.
4. With the unit running normally, open the blowdown valve and remove water to the point below the low water cutoff setting. The burner should tune off and re-start automatically when the proper water level is re-established. (If manual reset type low water cutoff is used, it will have to be reset.)

3.4.30 Set and check operation of low Oil Pressure Switch. Set at 80% of low fire oil pressure. Check visually, or test electrically to confirm that circuit opens at the proper oil pressure.

3.4.31 Check Atomizing Air Switch. Set just above the maximum operating pressure. Check visually, or test electrically to confirm that circuit opens on a loss of atomizing air pressure.

3.4.32 Check Blower Combustion Air Flow Switch.

1. Shut burner power off.
2. Disconnect both wires at the air flow switch and temporarily clip them together. Make sure that they cannot ground against anything, since they will be powered with 110 volts during the test.
3. Put a continuity meter across the two terminals.
4. Disconnect the wire to the main automatic oil valve.
5. Start the blower motor. The meter should real electrical continuity as soon as the blower starts.
6. Disconnect the wire which energizes the coil of the motor relay (starter) or open the main power disconnect switch to the burner. Within 3 to 4 seconds after the blower motor is de-energized, the meter should indicate an open air flow switch circuit (no continuity).
7. If the switch does not open in 3 to 4 seconds, re-adjust accordingly. Turn the air flow switch adjustment screw clockwise to shorten cut-off response time and counter-clockwise to lengthen cut-off response time.
8. Turn the burner power off. Remove the shorting clip from the two disconnected wires and let them hang loose. (They will be powered with 110 volts, so do not let them ground out.)
9. Reconnect the wire to the main automatic oil valve. Turn the burner on. With the air flow switch wires disconnected, the burner should go into a purge cycle, but neither the ignition nor the main fuel valve circuits will be energized. If they do energize, there is a wiring problem. Correct as required.
10. Turn power off. Reconnect the air flow switch wires to the air flow switch terminals. Place burner back into normal operation.

3.4.33 Check all burner and heat exchanger controls and operating devices.

3.4.34 The Owner's Operating Instructions, at the end of this manual, should be posted in a clearly visible location close to the burner.

3.4.35 If the burner operation is abnormal, refer to Trouble Shooting Suggestions, as well a trouble shooting information in the flame safeguard manufacturer's bulletin shipped with the burner. It is also strongly suggested that all test procedures outlined in the flame safeguard control manufacturer's bulletin be conducted.

3.4.36 Complete the Burner Start Up Information and Test Data sheets on pages 43.

3.5 Burner Start-Up Sequence Instructions: Heavy Oil Firing

3.5.1 The firing of #6 fuel oil requires that the oil be heated and continuously pumped throughout the piping system even during the burner off times. The oil and piping must remain hot to keep the oil viscosity low enough for pumping. The minimum oil temperature required for #6 oil to be pumped is 150 degrees F. Depending on the composition of the oil this temperature may need to be increased. The preheated oil is circulated throughout the piping system to include the oil pre-heater and the first safety shut-off oil valve mounted on the burner. The first safety shut-off valve is a three-way oil valve which allows the heated oil to flow back to the tank when the valve is not energized.

3.5.2 The oil must be further heated 20 to 40 degrees F above the circulating temperature to be properly atomized by the air atomizing nozzle. This is accomplished by the oil pre-heater mounted on the burner. The thermostat is located on the end of the heater shell, under the cover. During the burner shut down cycle air or steam is injected into the oil side of the nozzle supply line to purge the oil from the line and nozzle.

3.5.3 The startup procedure when using #6 oil is very much the same as with the startup procedure for #2 fuel with a few exceptions.

3.5.4 Follow all safety precautions and startup procedures listed in the Cmax I&O manual.

3.5.5 Set the oil temperature at the burner between 170 and 190 degrees F. Adjust the oil pre-heater if required. Note: To avoid nozzle fouling do not attempt to fire the burner if an oil temperature is less than170 degrees F. Once again, depending on the oil composition it may be necessary to increase the oil temperature even higher to achieve acceptable combustion. A temperature of 225 degrees F is not uncommon.

3.5.6 The burner may be equipped with air or steam atomization. If a compressor only is used set the nozzle air pre-purge pressure to approximately 30 psi. A bleed valve located on the compressor is adjusted to achieve the desired pressure. This pressure is indicated on the air side of the nozzle. If plant air is used, a differential regulator is used and it should be adjusted to approximately 5-10 psi nozzle air pre-purge. If steam is used, the differential pressure regulator will be adjusted to the same pressure. When steam is used with the compressor as a backup it will be necessary to increase the compressor output pressure since the differential pressure regulator will regulate the atomizing pressure. (This is the starting point for either atomizing medium and may require readjustment later at high fire to obtain proper combustion).

3.5.7 The oil pump pressure will be approximately the same as for #2 fuel and will be approximately 150 - 200 psi which is set by adjusting the oil pump pressure regulator/relief valve.

3.5.8 If proper atomization is not achieved, increase the oil temperature and/or atomization pressure.

4. IFGR: Induced Flue Gas Recirculation

4.1 Introduction

4.1.1 The Cmax can be equipped with Induced Flue Gas Recirculation (IFGR) system. The IFGR utilizes recirculation of flue gas to lower the overall NO_X emissions to comply with the NO_X emission regulations.

4.1.2 This system has been successfully proven in field applications on both watertube and firetube applications. Testing and field operations have been performed using natural gas, digester gas, and light oil. The IFGR Combustion System is U.L. listed as "Emissions Reduction Equipment" and is available as a retrofit for existing standard burner installations (natural gas and light oil).

4.1.3 The unique feature of the IFGR system is that the IFGR inlet assembly is adapted directly to Power Flame's standard gas or gas/oil burner.

4.1.4 Unlike most Low NO_X burner designs which incorporate complex control schemes, this system is designed for easy installation with simple start-up and control requirements. The IFGR control damper is driven from the main fuel air jackshaft control system and requires a one-time adjustment at initial commissioning.

4.2 Principle of operation

4.2.1 NO_X is the shorthand common name of two Nitrogen Oxides: NO and NO_2. The NO_X is a pollutant and constitutes a serious health hazard.

4.2.2 The NO_X is produced in several ways, the most common of which is the oxidation of the Nitrogen present in the air (thermal NO_X). This chemical process is mainly due to the high temperature around the flame.

4.2.3 The IFGR system lowers the flame peak temperature by introducing a certain amount of flue gas together with the combustion air, producing as a consequence a reduction in NO_X emissions.

4.2.4 The flue gas is introduced in the air inlet and mixed with the combustion air stream. This increased "air side" mass flow for a given heat release provides results very similar to lean combustion but, with less added oxygen to combine with nitrogen to form NO_X. As mentioned before, the rate of thermal NO_X formation is primarily temperature dependant, hence lower resultant NO_X formation is achieved by the heat absorption effect of the increased mass flow of combustion air/flue gas mixture in the combustion zone. This increased mass flow results in greater turbulence for the combustion process generally providing shorter, more compact flame envelopes.

4.2.5 Note: the added mass flow through the system results in a system pressure drop increase. A typical total of 20 to 30% combustion chamber static pressure increase can be expected on most installations when operating at the rated capacity of the heat exchanger.

4.3 Installation

4.3.1 The IFGR Low NO_X adapter is pre-mounted to the Power Flame burner. Induced flue gas recirculation (IFGR) piping is not provided by Power Flame. Induced flue gas pipe sizing recommendations are included in Figure 15.

4.3.2 Install the IFGR pipe from the stack, or last pass smoke box, to the burner IFGR connecting flange. If the takeoff is from the stack, it should be upstream of any stack damper or barometric damper. If a barometric damper is used, care must be taken to ensure that fresh air infiltration into the IFGR system does not occur. It is recommended that the IFGR pipe extends to the center of the stack and includes a 45˚ miter cut facing down into the stack flue gas flow (see Figure 15). Seamless carbon steel pipe or tubing is recommended for the IFGR pipe.

4.3.3 The IFGR piping should be routed to minimize pipe length and number of fittings. In higher draft applications, increased pipe sizes from that recommended in Figure 15 may be required.

4.3.4 Induced flue gas piping between the stack and burner should be evaluated for insulation requirements based on personnel protection requirements, allowable site heat dissipation specifications (if indoors), and applicable codes. Lower flue gas temperatures enhance IFGR operation. Caution must be taken not to operate at extended periods or larger number of cycles with IFGR temperatures below 250˚F as to prevent condensation and excessive corrosion.

4.3.5 The Induced Flue Gas Recirculation (IFGR) adapter includes an isolation damper assembly to ensure that IFGR is not introduced into the burner during pre-purge, ignition, initial main fuel, or post purge cycles. The shutoff damper is driven by a 2 position motor which includes an end position switch to prove that the IFGR is "OFF" during restricted cycles.

4.3.6 The IFGR shutoff damper motor actuation circuit includes a time delay to allow main flame establishment before introducing IFGR to the burner. This time delay (typically 2 minutes) allows for burner flame stabilization and prevents excessively cool IFGR flow in the system which may cause flue gas condensation.

4.3.7 The time delay is adjustable from 1 to 1023 seconds. Each switch on the device is marked with its associated time delay. Time delay adjustment is accomplished by switching the appropriate switch "ON" to obtain the desired cumulative delay set point.

4.3.8 Install gas supply piping and gas train components per the gas piping diagram supplied with the burner. If the burner is a combination gas/oil type, install supply and return oil piping, per the manufacturer's recommendations, adhering to all governing local and state codes.

4.3.9 Wire gas train components and interconnecting wiring per the wiring diagram supplied with the burner. IFGR wiring connections are integral to the burner and are pre-wired at the factory.

4.4 Start up: IFGR

4.4.1 For initial system commissioning it is recommended that this IFGR modulating damper be disconnected from the fuel/air control system and locked in the closed position.

4.4.2 With the initial adjustment complete, general start-up procedures are as described. When initially adjusting the fuel/air ratio over the desired firing range, the excess 0_2 in the boiler stack flue gas should be increased by 1% to 1.5% over standard burner set-up (for NO_X level less than 20 ppm systems, 1.5% to 3% over standard burner setup). Subsequent introduction of normally expected amounts of recirculated flue gas will typically decrease the excess 0_2 to standard burner operating levels.

NOVA® LOW NOx SYSTEMS
INDUCED FGR FLUE PIPE DATA
TYPE "CMAX" BURNERS

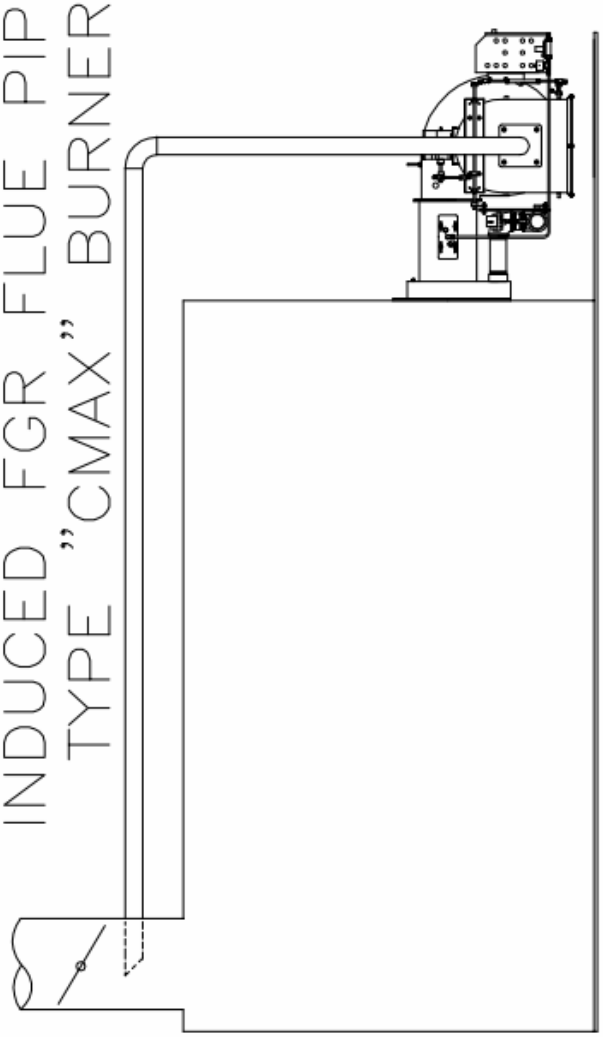

MINIMUM PIPE SIZE – SCHEDULE 10 STEEL PIPE

BURNER MODEL	MAXIMUM FEET FROM BURNER TO BOILER STACK							
	20'	30'	40'	50'	75'	100'	150'	200'
LNICM9-G(GO)-30	8"	8"	8"	8"	10"	10"	10"	12"
LNICM9A-G(GO)-30	8"	8"	10"	10"	10"	10"	12"	12"
LNICM9B-G(GO)-30	8"	10"	10"	10"	10"	12"	12"	12"
LNICM10-G(GO)-30	10"	10"	10"	10"	12"	12"	14"	14"
LNICM10A-G(GO)-30	10"	10"	10"	10"	12"	12"	14"	14"
LNICM10B-G(GO)-30	10"	10"	10"	12"	12"	12"	14"	14"
LNICM10C-G(GO)-30	12"	12"	12"	12"	14"	14"	16"	16"
LNICM11-G(GO)-30	12"	12"	12"	12"	14"	14"	16"	16"
LNICM11A-G(GO)-30	12"	12"	14"	14"	14"	16"	16"	18"
LNICM12-G(GO)-40	12"	14"	14"	14"	16"	16"	18"	18"
LNICM12A-G(GO)-40	12"	14"	14"	14"	16"	16"	18"	18"

EQUIVALENT LINEAL FEET FOR SCHEDULE 10 PIPE FITTINGS

PIPE FITTINGS	NOMINAL PIPE SIZE						
	6"	8"	10"	12"	14"	16"	18"
45° ELBOW	8.0'	10.7'	13.3'	16.0'	18.7'	21.3'	24.0'
90° ELBOW	15.0'	20.0'	25.0'	30.0'	35.0'	40.0'	45.0'
LG R.90 ELBOW	10.0'	13.5'	17.0'	20.0'	23.5'	26.7'	30.0'

NOTE 1: FIELD INSULATE ALL FLUE GAS PIPES AND FITTINGS FOR PERSONNEL PROTECTION, AND UNDESIRED HEAT LOSS/HEAT GAIN.

NOTE 2: SIZES ARE BASED ON FGR TEMPERATURES OF LESS THAN 550°F AND ON DRAFT CONDITIONS AT THE BREACH OF LESS THAN .1" W.C.DRAFT (-.1"W.C. GAUGE). CONSULT POWERFLAME IF CONDITIONS OUTSIDE OF THESE PARAMETERS ARE ENCOUNTERED.

NOTE 3: SIZES ARE BASED ON THE MAXIMUM CAPACITY OF THE BURNER AND 15% FGR. BURNERS FIRING LESS THAN THEIR MAXIMUM CAPACITY OR USING LESS THAN 15% FGR MAY BE ABLE TO USE A SMALLER PIPE SIZE. CONSULT FACTORY TO DETERMINE IF A SMALLER PIPE SIZE CAN BE UTILIZED.

Power Flame Incorporated
2001 SOUTH 21st STREET
PARSONS, KANSAS 67357
PHONE (620) 421-0480
FAX (620) 421-0948

ENGINEERING SPEC.
AND DATA SHEET

Figure 15: IFGR piping specs

4.4.3 After the burner fuel/air ratios have been set and the unit sufficiently warm, the IFGR modulating damper can be set. Ensure that the burner is at minimum input (low fire), that the IFGR delay time has expired, and that the IFGR Shutoff Purge Damper is open to IFGR. Begin with a minimal IFGR modulating damper opening.

4.4.4 Monitor the flue NO_X content exiting the boiler stack. Slowly, in 5˚ increments open the IFGR modulating damper. Wait several minutes after each adjustment to ensure that sufficient time has elapsed for the flue analyzer to respond to the change. When the NO_X readings are below those required by job specifications, connect the IFGR modulating damper linkage ensuring that the damper remains at the last incremental adjustment point.

4.4.5 During and after each adjustment monitor the boiler and burner for combustion stability and check flue O_2 and CO content. If excessive combustion rumble is present or if CO levels exceed acceptable limits, reduce the IFGR control damper to the previous position.

4.4.6 After the IFGR modulating damper has been set and connected to the mechanical drive linkage the firing rate can be increased in 10% increments (for modulating units) to confirm emissions operation over the entire firing range. Typical IFGR modulating damper settings will be 10 to 15˚ open at low fire and 60 to 90˚ open at high fire. Different settings are acceptable based on the systems emissions performance. Drive linkage and arms can be appropriately adjusted if the IFGR modulating damper opening rates need to be speeded up or retarded.

4.4.7 As noted previously, the excess O_2 content in the flue gas will typically decrease 1% to 1.5% for a NO_X sub 30 ppm system, or from non-IFGR operational settings when expected IFGR amounts are introduced to the burner.

4.4.8 Combustion problems are generally caused by too much IFGR volumetric flow. If stack flue gas pressures are high, typically above +0.1" W.C., a reducing orifice may be required in the IFGR piping to restrict excessive flow. Consult Power Flame if this circumstance is encountered.

4.4.9 Typical IFGR percentages range 5% to 15% on a NO_X sub 30 ppm systems and 15% to 30% on a NO_X sub 20 ppm systems. Insufficient IFGR results in higher NO_X emissions, while excessive IFGR flow can result in combustion instability and higher-than-normal CO.

4.5 Determining Percentage of IFGR

4.5.1 There are two commonly used methods for determining the IFGR volumetric flow rate (% IFGR).

4.5.2 The first method requires the use of an oxygen analyzer to measure the excess oxygen level in the flue gas and the oxygen level of the combustion air plus IFGR in the burner air housing. The second reading (burner air housing) may be obtained by inserting the analyzer probe through the burner observation port or by drilling a small hole and inserting the probe near the discharge of the air housing. The small hole can be plugged with a sheet metal screw. After taking the two readings follow the instructions on Figure 18 to determine the % IFGR.

4.5.3 The second method for determining % IFGR involves taking temperature measurements of the ambient air, flue gas and combustion air/IFGR mixture. Using thermometers or temperature probes, take the required readings to calculate the temperature ratio φ:

$$\varphi = \frac{T_{mix} - T_{amb}}{T_{fgr} - T_{mix}}$$

T_{mix} = Combustion Air/IFGR Mix (inside air housing)
T_{amb} = Ambient Air Temperature
T_{fgr} = Flue Gas Temperature (inside IFGR duct)

4.5.4 Based upon the temperature ratio the % IFGR can be calculated by:

$$\%_{IFGR} = \frac{1800 \cdot \varphi}{1 + 18 \cdot (1 + \varphi)}$$

4.5.5 To simplify this calculation we have provided a graph (Figure 16) where the temperature ratio is plotted against the % IFGR. After calculating the temperature ratio and locating that value on the X-Axis, move vertically to the plotted curve then read the % IFGR value across the graph on the Y-Axis. Excess air (% O_2) in the stack or fuel type have very little effect on the calculated % IFGR. Software for this calculation can be provided by Power Flame through our Customer Service Department (620-421-0480 or CSD@powerflame.com).

4.5.6 The IFGR Low NOx flame characteristics will differ from that of a standard gas burner. The additional air-side volumetric flow results in greater turbulence, caused by the addition of recirculated flue gas,. This results typically in smaller more compact flames than a standard burner. The flame may also appear "hazy" due to the effects of IFGR lowering flame temperature.

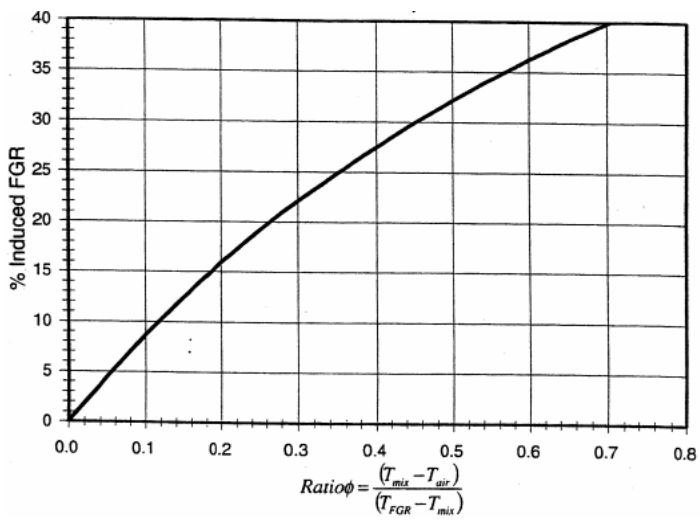

Figure 16: percent Induced FGR as function of Temperature Ratio

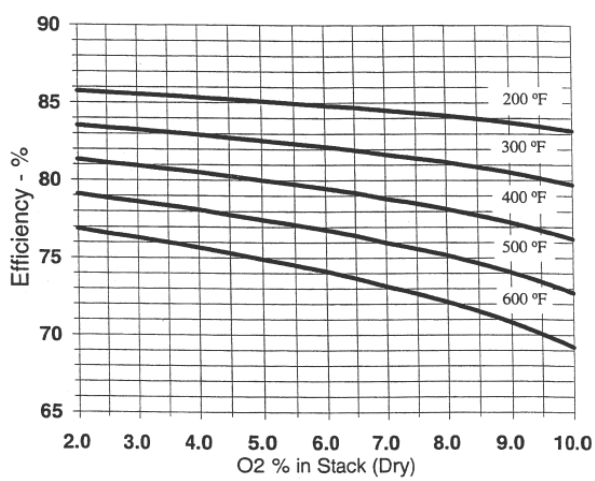

Figure 17: combustion efficiency for Natural Gas as function of O_2 and net stack temperature

4.5.7 Most codes and standards regarding NOx emissions are based on a PPM level corrected to 3% O_2. To correct NOx to a specified O_2 level, use the following formula:

$$NO_X(corrected) = \frac{17.9}{20.9 - O_2(measured)} \cdot NO_X(measured)$$

4.5.8 Figure 17 shows combustion efficiency as a function of net stack temperature and O_2 in the stack for natural gas. Net stack temperature is the difference between the measured stack temperature and ambient temperature. This graph does not include radiation and convection losses from the boiler or heat exchanger.

EXCESS AIR	% FLUE OXYGEN	PERCENT OXYGEN IN WINDBOX																				
		1% IFGR	2% IFGR	3% IFGR	4% IFGR	5% IFGR	6% IFGR	7% IFGR	8% IFGR	9% IFGR	10% IFGR	11% IFGR	12% IFGR	13% IFGR	14% IFGR	15% IFGR	16% IFGR	17% IFGR	18% IFGR	19% IFGR	20% IFGR
0.0	0.0	20.7	20.5	20.3	20.1	19.9	19.7	19.5	19.4	19.2	19.0	18.8	18.7	18.5	18.3	18.2	18.0	17.9	17.7	17.6	17.4
5.0	1.0	20.7	20.5	20.3	20.1	20.0	19.8	19.6	19.4	19.3	19.1	18.9	18.8	18.6	18.5	18.3	18.2	18.0	17.9	17.7	17.6
10.0	1.9	20.7	20.5	20.3	20.2	20.0	19.8	19.7	19.5	19.3	19.2	19.0	18.9	18.7	18.6	18.4	18.3	18.1	18.0	17.9	17.7
11.0	2.1	20.7	20.5	20.4	20.2	20.0	19.8	19.7	19.5	19.3	19.2	19.0	18.9	18.7	18.6	18.4	18.3	18.2	18.0	17.9	17.8
12.0	2.2	20.7	20.5	20.4	20.2	20.0	19.8	19.7	19.5	19.4	19.2	19.1	18.9	18.8	18.6	18.5	18.3	18.2	18.1	17.9	17.8
13.0	2.4	20.7	20.5	20.4	20.2	20.0	19.9	19.7	19.5	19.4	19.2	19.1	18.9	18.8	18.6	18.5	18.3	18.2	18.1	17.9	17.8
14.0	2.6	20.7	20.5	20.4	20.2	20.0	19.9	19.7	19.5	19.4	19.2	19.1	18.9	18.8	18.6	18.5	18.4	18.2	18.1	18.0	17.8
15.0	2.7	20.7	20.5	20.4	20.2	20.0	19.9	19.7	19.6	19.4	19.2	19.1	19.0	18.8	18.7	18.5	18.4	18.3	18.1	18.0	17.9
16.0	2.9	20.7	20.5	20.4	20.2	20.0	19.9	19.7	19.6	19.4	19.3	19.1	19.0	18.8	18.7	18.6	18.4	18.3	18.2	18.0	17.9
17.0	3.0	20.7	20.6	20.4	20.2	20.0	19.9	19.7	19.6	19.4	19.3	19.1	19.0	18.8	18.7	18.6	18.4	18.3	18.2	18.0	17.9
18.0	3.2	20.7	20.6	20.4	20.2	20.1	19.9	19.7	19.6	19.4	19.3	19.1	19.0	18.9	18.7	18.6	18.5	18.3	18.2	18.1	17.9
19.0	3.3	20.7	20.6	20.4	20.2	20.1	19.9	19.8	19.6	19.5	19.3	19.2	19.0	18.9	18.7	18.6	18.5	18.3	18.2	18.1	18.0
20.0	3.5	20.7	20.6	20.4	20.2	20.1	19.9	19.8	19.6	19.5	19.3	19.2	19.0	18.9	18.8	18.6	18.5	18.4	18.2	18.1	18.0
21.0	3.6	20.7	20.6	20.4	20.2	20.1	19.9	19.8	19.6	19.5	19.3	19.2	19.0	18.9	18.8	18.6	18.5	18.4	18.3	18.1	18.0
22.0	3.8	20.7	20.6	20.4	20.2	20.1	19.9	19.8	19.6	19.5	19.3	19.2	19.1	18.9	18.8	18.7	18.5	18.4	18.3	18.2	18.1
23.0	3.9	20.7	20.6	20.4	20.2	20.1	19.9	19.8	19.6	19.5	19.4	19.2	19.1	18.9	18.8	18.7	18.6	18.4	18.3	18.2	18.1
24.0	4.0	20.7	20.6	20.4	20.3	20.1	19.9	19.8	19.7	19.5	19.4	19.2	19.1	19.0	18.8	18.7	18.6	18.5	18.3	18.2	18.1
25.0	4.2	20.7	20.6	20.4	20.3	20.1	20.0	19.8	19.7	19.5	19.4	19.2	19.1	19.0	18.8	18.7	18.6	18.5	18.4	18.3	18.2
27.0	4.4	20.7	20.6	20.4	20.3	20.1	20.0	19.8	19.7	19.5	19.4	19.3	19.1	19.0	18.9	18.8	18.6	18.6	18.4	18.3	18.2
30.0	4.8	20.7	20.6	20.4	20.3	20.1	20.0	19.8	19.7	19.6	19.4	19.3	19.2	19.1	18.9	18.8	18.7	18.6	18.4	18.3	18.3
35.0	5.4	20.7	20.6	20.4	20.3	20.2	20.0	19.9	19.8	19.6	19.5	19.4	19.2	19.1	19.0	18.9	18.8	18.7	18.5	18.4	18.3
40.0	6.0	20.8	20.6	20.5	20.3	20.2	20.1	19.9	19.8	19.7	19.5	19.4	19.3	19.2	19.1	19.0	18.9	18.8	18.7	18.6	18.4
45.0	6.5	20.8	20.6	20.5	20.4	20.2	20.1	20.0	19.8	19.7	19.6	19.5	19.4	19.4	19.2	19.1	19.0	18.9	18.8	18.7	18.5
50.0	7.0	20.8	20.6	20.5	20.4	20.2	20.1	20.0	19.9	19.8	19.6	19.5	19.4	19.3	19.2	19.1	19.0	18.9	18.8	18.7	18.6
55.0	7.4	20.8	20.6	20.5	20.4	20.3	20.1	20.0	19.9	19.8	19.7	19.6	19.5	19.3	19.2	19.1	19.0	18.9	18.8	18.7	18.7
60.0	7.8	20.8	20.6	20.5	20.4	20.3	20.2	20.0	19.9	19.8	19.7	19.6	19.5	19.4	19.3	19.2	19.1	19.0	18.9	18.8	18.7
70.0	8.6	20.8	20.7	20.5	20.4	20.3	20.2	20.1	20.0	19.9	19.8	19.7	19.6	19.5	19.4	19.3	19.2	19.1	19.0	18.9	18.9

Chart use

Instructions:

1 Measure the oxygen content in the flue and air housing (combustion air plus IFGR) on the system being evaluated.
2 Locate on one of the two left hand columns the stack flue oxygen or excess air condition closest to your systems measured values.
3 Travel to the right on the row chosen in 2 to the column closest to the windbox measured oxygen content in your system.
4 Follow the column chosen in 3 to the top of the chart to determine the volumetric IFGR flow under the measured conditions.

Figure 18: IFGR flow determination

5. TROUBLESHOOTING

5.1 Oil Pump or Oil Flow Problems and Typical Solutions

5.1.1 No Oil Delivered

1) Reversed pump rotation
2) Suction lift too high (see Figure 4)
3) Air leak in suction line
4) Pump not primed, or has lost prime
5) Pump coupling not installed properly
6) Pump defective
7) Line plugged
8) Valve closed
9) Defective relief valve or valve pressure set too low

5.1.2 Pump Leaks

1) Cover bolts need tightening; gasket broken or defective
2) Mechanical seal (used on certain models) may be scratched, due to dirt
3) Inlet head pressure too high. Install a pressure reducing valve set a 3 psig or less
4) Oil line fitting not tight

5.1.3 Noisy Pump

1) Air leak in suction line
2) Pump not securely mounted
3) Vibration caused by bent shaft or misalignment
4) Pump overloaded
5) Suction line vacuum so high that vapor forms within the liquid (see Figure 4)

5.1.4 Capacity Too Low

1) Suction lift too high (see Figure 4)
2) Air leak in suction line
3) Suction line too small (see Figure 4)
4) Check valve or strainer is obstructed or dirty
5) Mechanical defects – pump badly worn or seal defective

5.1.5 For additional oil pump information, refer to the oil pump manufacturer's product bulletin supplied with the burner.

5.2 Gas Pilot Ignition Adjustment

5.2.1 Excessive gas pressure and insufficient air may be the most common causes of pilot ignition failure. Gas pressure should be read at the test tee on the pilot gas supply pipe with a manometer or 0 – 10" W.C. gauge. Look for stability of gas pressures at all times. Some job conditions or heat exchangers may require larger air damper openings or different gas pressures than recommended. For dependable pilot ignition, always use air damper setting to provide the MOST air and LOWEST pilot gas pressure settings allowable for good pilot signal at all times.

1) Remove pilot assembly and check for proper orifice size and spark gap. The spark gap between the electrode and outside radius of the gas pilot assembly should be 1/16" – 3/32. See Figure 13.

2) Close checking cock (main test cock). Start up burner and flip run/test switch to test. Access to check switch on Fireye D Series is best obtained by using a small right angle tool, such as an Allen Wrench.
3) Observe pilot signal with DC voltmeter or micro-ammeter and reduce pilot gas pressure to a point where the signal is erratic or reduced substantially from initial reading.
4) Raise the pilot gas pressure to the point where the signal is again stable. Remove scanner and use a mirror to view the pilot flame through the scanner pipe (a live flame from cigarette lighter or butane torch may be needed to keep scanner actuated). Be sure to get full coverage of scanner pipe by pilot flame.
5) Release check switch and observe meter as main gas valve opens and moves air damper. If there is a drop in signal as this happens, increase pilot pressure slightly until signal is steady at all times.

5.2.2 Refer to the next section, Gas Pilot Flood Test, as another means of determining proper pilot fuel/air mixture.

5.3 Gas Pilot Flood Test

5.3.1 Many pilot problems are caused by a poor mixture of gas and air at the point of ignition (ignition spark gap). The cause of this poor mixture condition is usually excessive gas flow or insufficient air (air dampers are closed too far).

5.3.2 Once the pilot is adjusted and felt to be correct – it is suggested that the following test be accomplished to further verify that the pilot will be reliable.

1) Turn the burner off and shut the main leak test cock in the main gas train. (This valve should always be closed when making pilot adjustments.)
2) Take steps to keep the fuel air linkage in the pilot light off position. If the flame safeguard control has a run/test switch, it can be placed in the test position. If the flame safeguard control does not have the run/test switch, it may be necessary to disconnect the power wire to the motorized gas valve.
3) Install a 0 to 10” W.C. gas pressure gauge or a manometer in the pilot test tee fitting. Plug an appropriate flame signal meter into the flame safeguard control.
4) Disconnect the high tension ignition lead-wire at the ignition transformer secondary terminal. Either hold onto the insulated portion or let the free ignition wire hang loose, so that it is not able to come into contact with the bare ignition terminal on the transformer.
5) Start the burner and let it go through the pre-purge period. As soon as the pilot ignition circuit is energized (listen for the sound of the solenoid valve opening or watch the pilot gas pressure gauge), let about 3 or 4 seconds lapse and then CAREFULLY (the ignition transformer is putting out 6000 volts) touch the ignition leadwire to the transformer terminal secondary. If the pilot fuel/air mixture and ignition electrode are adjusted correctly, the pilot will light instantly and the flame signal reading will be steady and of the correct value. If the pilot does not light instantly, then readjust the pilot gas pressure and/or the air dampers and/or the ignition electrode setting according to the information provided in this manual.
6) Turn the burner off. Re-connect the ignition leadwire to the ignition transformer secondary terminal. Set the check switch in the flame safeguard control for automatic operation. Re-connect any wires that have been disconnected to hold the motorized gas valve in the pilot position. Open the checking gas cock, turn the burner on and verify that the pilot lights and proves instantly, providing good, smooth ignition of the main gas flame.
7) If Gas Pilot Flood Test is successful, it is not always a guarantee of correct pilot air/fuel mixture, but a failure will almost always indicate an excessively rich mixture.

Flame Safeguard		***Scanner Signal (U.V. or Infrared)***	
Manufacturer	***Model***	***Minimum****	***Maximum***
Honeywell	*R7800*	*1.25 DC Volts*	*5.0 DC Volts*
Fireye	*E110*	*10*	*80*

** Below the minimum signal the Flame Safeguard will lock in failure after 3 sec*

Table 5: Acceptable Stable Pilot and/or Main Flame Current Readings

5.4 Trouble Shooting Suggestions Gas, Oil or Gas/Oil Burner: general

5.4.1 Burner Fails to Start

1) Defective On/Off or fuel transfer switch: replace.
2) Control circuit has an open control contact. Check limits, low water cutoff, proof of closure switch and others as applicable.
3) Bad fuse or switch open on in-coming power source. Correct as required.
4) Motor overloads tripped. Reset and correct cause for trip out.
5) Flame safeguard control safety switch tripped out. Reset and determine cause for apparent flame failure.
6) Loose connections or faulty wiring. Tighten all terminal screws and consult wiring diagram furnished with the burner.
7) Flame safeguard control starting circuit blocked due to flame relay being energized. Possible defective scanner: replace. Possible defective amplifier: replace. Scanner actually sighting flame due to leaking fuel valve: correct unwanted flame cause. Defective flame safeguard control: replace.
8) Defective blower motor. Repair or replace.

5.4.2 Occasional Lockouts For No Apparent Reason

1) Gas pilot ignition failure. Refer to pilot adjustment section and readjust to make certain that the ignition is instant and that flame signal readings are stable and above minimum values. Use a manometer or 0 to 10" W.C. gas pressure gauge on pilot test tee to make certain that pressure is as recommended.
2) Gas pilot ignition. Verify that there are no cracks in the porcelain and that transformer end and electrode end plug in connections are tight.
3) Loose or broken wires. Check all wire nut connections and tighten all terminal screw connections in panel and elsewhere as appropriate.
4) Ensure that when main flame lights, the air flow switch is not so critically set as to allow occasional momentary opening of the air switch contacts.
5) Occasional low voltage supply. Have local utility correct. Make certain that the burner control circuit transformer (if supplied) is correct for the voltage being supplied.
6) Occasional low gas supply pressure. Have utility correct.
7) Air leak in oil suction line or check valve not holding. Correct as required.

5.5 Trouble Shooting Suggestions: Gas

5.5.1 Burner Motor Runs, but Pilot Does Not Light

1) Gas supply to burner shut off – make sure all manual gas supply valves are open. Automatic high pressure valve at meter such as Sentry type tripped shut due to high gas pressure – reset valve and correct cause for trip out.

2) Pilot solenoid valve not opening – listen and feel for valve actuation. Solenoid valve not being powered – check electrical circuitry. Replace coil or entire valve if coil is burner out.
3) Defective gas pilot regulator – replace.
4) Gas pressure too high or too low at pilot orifice. Check orifice size in gas pilot assembly. Replace if incorrect. Refer to gas pilot adjustments for correct settings. Readjust as required.
5) Defective ignition transformer – replace. Incorrect ignition electrode settings – refer to gas pilot adjustments for correct settings.
6) Defective flame safeguard control or plug in purge timing card. Replace as required.
7) Air flow switch not making circuit – check out electrically and correct pressure adjustment on switch, if required. Defective air flow switch – replace. Air switch negative pressure sensing tube out of position – reposition as necessary.

5.5.2 Burner Motor Runs and Pilot Lights, but Main Gas Flame Is Not Established

1) Main shutoff or test cock closed. Check to make certain fully open.
2) Pilot flame signal reading too low to pull in flame safeguard relay. Refer to gas pilot settings section and readjust as required.
3) Defective automatic main or auxiliary gas shut off valves. Check electrical circuitry to valves. Replace valves or correct circuitry as required.
4) Defective flame safeguard control or plug in amplifier. Check and replace as required.
5) Butterfly valve set incorrectly on modulating burner. Readjust as required.
6) Main gas pressure regulator atmospheric vent line obstructed. Correct.
7) Defective main gas pressure regulator – replace. Miss adjusted main gas pressure regulator – readjust to meet required operational values.

5.5.3 Carbon Monoxide Readings on Gas Firing

1) Flame impingement on cold heat transfer surfaces caused by excessive firing rate. Reduce firing rate to correct input volume.
2) Flame impingement on cold combustion chamber surfaces due to undersized combustion chamber. Refer to chamber size charts, page 13, and/or contact factory for additional information.
3) Incorrect gas/air ratios. Readjust burner to correct CO_2 / O_2 levels, reducing CO formation to appropriate level. Refer to Figure 7 for additional information.

5.5.4 Gas High Fire Input Cannot Be Achieved

1) Gas company pressure regulator or meter operating incorrectly, not allowing required gas pressure at burner train inlet. Have gas company correct.
2) Gas cock upstream of train inlet not fully open. Check and correct.
3) Gas line obstructed. Check and correct.
4) Gas train main and/or leak test cocks not fully open. Check and correct.
5) Gas supply line between gas company regulator and burner inlet too small. Check supply pressure at meter, determine pressure drop and increase line size as required, or raise supply pressure to compensate for small line. Do not raise pressure so high that under static (no flow) conditions the pressure exceeds the maximum allowable pressure to the gas train components on the burner.
6) Burner gas train components sized too small for supply pressure. Increase component size as appropriate.
7) Automatic gas valve not opening fully due to defective operation. Replace gas valve.
8) Butterfly valve not fully opened. Readjust.
9) Defective main gas pressure regulator. Replace
10) Incorrect spring in main gas pressure regulator. Replace as required.
11) Main gas pressure regulator vent line obstructed. Check and correct.

12) Normally open vent valve (if supplied) not closing when automatic gas valves open. Check to see if valve is fully closed when automatic valves are open. Replace vent valve, if not closing fully.
13) Gas annulus ring too far forward. Turn adjusting rods ¼ turn counter clockwise. Repeat if necessary.

5.6 Trouble Shooting Suggestions: Oil

5.6.1 Burner Motor runs, but Oil Flame Is Not Established

1) Defective or incorrect size oil nozzle. Remove and clean or replace.
2) Low oil pressure. Check with gauge for correct light-off pressure.
3) Defective oil pump. Replace.
4) Defective oil solenoid valve. Replace.
5) Oil pump coupling loose or defective. Replace or tighten as required.
6) Low oil pressure switch defective or incorrectly set. Adjust or replace switch.
7) Ignition transformer defective. Replace.
8) Air flow switch not making. Reset pressure or replace.
9) Defective flame safeguard control or plug in purge timer card. Replace.
10) Air dampers held in high fire position due to mechanical binding of linkage. Readjust linkage.
11) Loose wire connections. Check and tighten all connections.

5.6.2 Oil Flame Ignites, but then Flame Safeguard Control Locks Out On Safety

1) Flame scanner lens dirty. Remove and clean.
2) Scanner sight tube blocked or dirty. Check and clean.
3) Flame scanner defective. Replace.
4) Defective oil nozzle causing unstable flame and scanning problems. Replace oil nozzle.
5) Fuel/air ratios incorrect, resulting in unstable or smoky flame causing scanner flame sighting problem. Readjust ratios for clean stable flame.
6) Defective flame safeguard amplifier or control. Replace as appropriate.

5.6.3 Oil Flame Extremely Smoky At Light Off Or In Low Fire Position

1) Defective or incorrect size oil nozzle. Replace.
2) Fuel/air ratio incorrect. Readjust.
3) Atomizing air pressure too low. Close air bleed valve to increase air pressure.

5.6.4 Light Off Oil Flame Is Established and Proven, But Burner Will Not Attempt to Go To The High Fire Position

1) Temperature or pressure control could be defective or not set to call for high fire. Readjust or replace control.
2) Loose wires or incorrectly wired. Verify wiring and tighten all connections.
3) Flame safeguard control or high fire panel switching relay (if supplied) defective. Verify and correct as required.
4) Linkage mechanically binding. Readjust linkage.
5) Defective modulating motor. Replace.

5.6.5 Low Oil Flame Is Established and Proven, but Flame Out Occurs in Transition from Low Fire to High Fire.

1) Defective or incorrect size oil nozzle. Replace.
2) High fire oil pressure too low. Readjust.
3) Air dampers set too far open at low fire, which causes flame to blow out in starting to high fire. Readjust dampers.

4) Oil pump coupling loose or defective. Tighten or replace.
5) Defective oil pump. Replace.
6) Linkage mechanically binding. Readjust.
7) Fuel/air ratios set incorrectly, causing flame to blow out when going to high fire. Readjust linkage.
8) Atomizing air pressure set incorrectly.

5.6.6 White Smoke Formation on Oil Firing

1) Oil/air ratios incorrect due to excess air, or oil flow is too low. Readjust for proper fuel input, O_2 and smoke reading.

5.6.7 Gray or Black Smoke Formation on Oil Firing

1) Impingement on cold combustion chamber surfaces due to under sized chamber, or incorrect oil nozzle spray angle for application. This could also result in carbon formation on chamber surfaces. Refer to chamber sizing, Table 1 for additional information. If chamber is the correct size, change nozzle spray angle in order to shorten or narrow the flame as required.
2) Defective or dirty oil nozzle. Replace or clean nozzle.
3) Incorrect oil/air ratios. Readjust burner to correct O_2 and smoke levels.
4) Atomizing air pressure too low resulting in poor atomization. Readjust.

5.6.8 Oil High Fire Input Rate Cannot Be Achieved.

1) Oil nozzle size too small. Remove nozzle and check markings. Replace with correct size nozzle.
2) Nozzle defective. Replace. Nozzle mesh filter dirty. Clean or replace.
3) Oil supply pressure to nozzle too low. Readjust.
4) Oil pump defective. Replace.
5) Atomizing air pressure too high. Readjust.
6) Oil pump coupling loose (slipping) or defective. Replace.
7) Linkage mechanically binding. Readjust.
8) Metering valve set incorrectly. Readjust.
9) Oil suction line too small or partially blocked. Make vacuum test while at high fire. If the vacuum is in excess of 10” HG, consult line sizing on Figure 4. Make line size changes, if required.
10) Blocked or dirty suction line oil filter. Replace or clean.
11) Manual valves in suction line not fully open. Check and correct.
12) Suction line check valve or foot valve operating incorrectly. Check and correct.
13) Vent system on oil tank blocked creating vacuum on tank, with high vacuum and lowered oil flow to burner. Check and correct.

5.6.9 Additional trouble shooting information can be found in the Flame Safeguard Control Bulletin supplied with the burner.

6. MAINTENANCE

6.1 General Information

6.1.1 Only qualified service technicians should make mechanical or electrical adjustments to the burner and/or associated control equipment.

6.1.2 Preventive maintenance can usually be performed by building maintenance personnel.

6.1.3 Always follow the information provided in the Owner Operating Instructions at the end of this manual. These should be conspicuously posted in the burner room at the time of the initial burner installation and startup.

6.1.4 Always turn the power supply off to the burner and close manual fuel valves as appropriate for routine maintenance.

6.1.5 Make sure that combustion and ventilation fresh air sources to the burner room remain clean and open.

6.1.6 Periodically check all electrical connections and make sure the flame safeguard control chassis is firmly connected to its wiring base.

6.1.7 Refer to manufacturer's product bulletins supplied with the burner for maintenance on the flame safeguard control and other components.

6.1.8 Refer to heat exchanger manufacturer's instructions for general inspection procedures and for specific testing and inspection of all liquid level controls, pressure/temperature relief and other applicable items.

6.1.9 If you have any questions about the procedures listed above or questions relating to components or devices on your unit not specifically covered in the above, contact our Service Department at (620) 421-0480 for assistance.

6.2 Periodic Check List

Item	Frequency	Checked By	Remarks
Gages, monitors and indicators	Daily	Operator	Make visual inspection and record readings in log
Firing rate control	Weekly	Operator	Verify heat exchanger manufacture's settings
	Semiannually	Service Technician	Verify heat exchanger manufacture's settings
	Annually	Service Technician	Check with combustion test
Flue, vent, stack or outlet damper	Monthly	Operator	Make visual inspection of linkage check for proper operation
Combustion air	Monthly	Operator	Check that all sources remain clean and open
Ignition System	Weekly	Operator	Make visual inspection Check flame signal strength (see Combustion Safety Controls)
Flue, vent, stack or outlet damper	Monthly	Operator	Make visual inspection of linkage Check for proper operation
Pilot and main gas or oil valve	Weekly	Operator	Open limit switch-make aural and visual check Check valve position indicators Check fuel meters if so fitted
	Annually	Service Technician	Perform leakage tests (refer to valve manufacturer's instructions)
Flame failure	Weekly	Operator	Close manual fuel supply for (1) pilot and (2) main fuels and check safety shutdown timing and log
Flame signal strength	Weekly	Operator	If flame signal meter installed, read and log for both pilot and main flames Notify service organization if readings are very high, very low, or fluctuating (Refer to flame safeguard manufacturer's instructions)
Pilot turndown tests	As required/annually	Service Technician	Required after any adjustments to flame scanner mount or pilot burner (Refer to flame safeguard manufacturer's instruction)
Pilot signal	As required/annually	Service Technician	Verify that the scanner does not pick up the spark or the glow from the refractory
High limit safety control	Annually	Service Technician	Refer to heat exchanger manufacturer's instructions
Operating control	Annually	Service Technician	Refer to heat exchanger manufacturer's Instructions
Draft, fan, air pressure,and damper	Monthly	Operator	Refer to this manual and control manufacturer's instructions
High & low gas pressure interlocks	Monthly	Operator	Refer to instructions in this manual
Low oil pressure interlocks	Monthly	Operator	Refer to instructions in this manual
Fuel valve interlock switch	Annually	Service Technician	Refer to valve manufacturer's instructions
Purge switch	Annually	Service Technician	Refer to fuel/air control motor manufacturer's instructions
Low fire start interlock	Annually	Service Technician	Refer to fuel/air control motor manufacturer's instructions
Automatic changeover control (dual fuel)	Annually	Service Technician	Under supervision of gas utility
Remove oil drawer assembly	Annually	Service Technician	Remove and clean
Blower motor and blower wheel	Annually	Service Technician	Remove and clean as necessary
Gas pilot assembly	Annually	Service Technician	Remove and clean as necessary
Air compressor	Monthly	Operator	Check oil level and fill as required

7. BURNER START UP INFORMATION & TEST DATA

The following information shall be recorded for each burner start up

Power Flame model No._____ Invoice No._____ Serial No._____

Installation Name_____

Start Up Contractors Name_____

Name of Technician Performing Start Up_____

Phone_____ Start Up Date_____

Type of Gas: *Natural Gas*_____ *LP*_____ *Other* _____ Fuel Oil Grade No. _____

Gas Firing					
Gas Pressure at Train Inlet	Burner Off		Flame signal	Pilot	
	Low Fire			Low Fire	
	High fire			High fire	
Stack Outlet Test Point Draft	Low fire		O_2 (%)	Low fire	
	High Fire			High fire	
CO (ppm)	Low fire		Nox (ppm)	Low fire	
	High Fire			High fire	
Gas Pressure at Firing Head	Low fire		Combustion Efficiency (%)	Low fire	
	High Fire			High Fire	
Net Stack Temperature	Low fire		Input Rate BTU/HR	Low fire	
	High Fire			High Fire	
Over Fire Draft	Low fire		Power Supply	Volts	
	High Fire			Phase	
Gas Pressure at Pilot Test Tee				Hz	
Blower Motor Amps at High Fire			Control Circuit Volts		

Oil Firing					
Flame signal	Pilot		Gas Pressure Pilot	Pilot Train Inlet	
	Low Fire			Pilot Test Tee	
	High fire		High Fire Vacuum Reading pressure at oil pump inlet		
Oil Nozzle Supply pressure	Low fire		Oil Nozzle ByPass pressure	Low fire	
	High Fire			High Fire	
Bacharach scale smoke number	Low fire		O_2 or CO_2 (%) (specify)	Low fire	
	High Fire			High fire	
CO (ppm)	Low fire		NOx (ppm)	Low fire	
	High Fire			High fire	
Inpu Rate GPH	Low fire		Combustion Efficiency (%)	Low fire	
	High Fire			High Fire	
Net Stack Temperature	Low fire		Stack Outlet Test Point Draft	Low fire	
	High Fire			High Fire	
Over Fire Draft	Low fire		Power Supply	Volts	
	High Fire			Phase	
Remote Oil Pump Motor Amps at High Fire				Hz	
Blower Motor Amps at High Fire			Control Circuit Volts		

Control Settings		
General	Operating control cut out setting	
	Operating control cut in setting	
	Limit control cut out setting	
	Limit control cut in setting	
Gas	Low gas pressure switch (")	
	High gas pressure switch (")	
Oil	Low oil pressure switch (psi)	
	High oil pressure switch (psi)	

Operation Checklist					
Checked for Proper Operation of:	yes	no		yes	no
Low water cut off			Barometric damper		
High water cut off			Boiler room combustion air and ventilation provisions		
Flame safeguard control ignition failure			Oil tank vent system checked		
Flame safeguard control main flame failure			All oil lines checked for leaks		
Burner air flow switch			All gas lines checked for leaks		
Induced draft fan controls			Gas lines and controls properly vented		
Over fire draft controls			Other system components (specify)		
Fresh air damper end switch					

Notified_____of the following system deficiencies:_____

_____

_____

_____

_____

Notes:_____

_____

_____

_____

_____

_____

_____

_____

_____

_____

_____

OWNER OPERATING INSTRUCTIONS

WARNING

Improper installation, adjustment, alteration, service or maintenance can cause injury or property damage. Refer to the burner manual for assistance or additional information consult a qualified installer, service agency or the gas supplier.
Do not store or use gasoline or other flammable liquids and vapors in the vicinity of this or any other appliance.

START UP

Preparation for Start Up

1) Ensure that the system is in working order. If heat exchanger is a boiler, ensure that proper water level is available.
2) For oil burner make sure that the oil tank has an adequate fuel level and that the fuel is the proper grade.
3) Set the burner control panel switch to the OFF position.
4) Combination Gas/Oil burner: set the fuel selector switch to the fuel to be burned.
5) Turn the thermostat or operating control down to its lowest setting.
6) Check fuses and replace as necessary.
7) Depress the flame safeguard programming control reset button.

Start Up – Gas Burner

1) Manually open and close the main gas shut off cock, leak test cock and pilot cock to determine that they operate freely. Open all three cocks. (Reset low gas pressure switch if supplied).
2) Set the main power switch and burner panel control switch to the ON position. Wait 30 seconds and turn up thermostat or operating control to the desired setting.
3) The burner blower motor will start and after a suitable pre-purge period (this will vary with the type of flame safeguard control supplied – but will usually be minimum of 30 seconds to a maximum of 90 seconds) the burner pilot will light, after which the main flame will be established.
4) If the system does not respond properly, contact your qualified burner service company.
5) When burning gas on a combination gas/oil unit that has a blower motor driven oil pump, open all oil line valves. Oil must circulate through the oil pump, even when burning gas.

Start Up – Oil Burner

1) Open all valves in oil lines.
2) If pilot gas ignition system is supplied: open and close the pilot gas cock to determine that it is operating freely. Open the pilot gas cock.
3) Set the main power switch and burner panel control switch to the ON position. Wait 30 seconds and turn up thermostat or operating control to the desired setting.
4) The burner blower motor will start. Depending upon the type of flame safeguard control supplied, the fuel ignition system may energize within 1 or 2 seconds after the blower motor starts or could be as long as 90 seconds.
5) If the system does not respond properly, contact you qualified burner service company.

EXTENDED SHUT DOWN

1) Place main power switch and burner control panel switch in the OFF position.
2) Close all valves in gas lines.
3) Cover burner to protect it from dust and dampness.

FOR YOUR SAFETY

If you smell gas:

1) Open windows
2) Do not touch electrical switches
3) Extinguish any open flame
4) Call you gas supplier immediately

IMPORTANT PRECAUTIONS

1) Never attempt to light burner with paper or other materials.
2) Never experiment with the burner.
3) Never change the fuel or air adjustments without consulting with the burner service company.
4) Never attempt to light the burner if combustion chamber contains any unburned fuel or gases.
5) Never throw waste paper, rags, garbage or other waste materials into the combustion chamber.
6) Never wash out heating equipment room without first covering the burner with waterproof material.

MAINTENANCE

Burner should be maintained and serviced by a qualified service agent. See service and maintenance section of the manual for suggestions on periodic maintenance and service.

POWER FLAME INCORPORATED
2001 South 21 St. Street, Parsons, KS 67357
620-421-0480, FAX 620-421-0948

Power Flame Incorporated
Limited Warranty

Power Flame Incorporated, hereinafter called the Seller, of 2001 South 21st Street, Parsons, Kansas, hereby warrants its equipment manufactured by it and bearing its nameplate (hereinafter called Warranted Equipment) in the respects and exclusively for the benefit of those users, described herein. THIS LIMITED WARRANTY SHALL EXTEND SOLELY TO THOSE PERSONS WHO ARE OWNERS OF THE WARRANTED EQUIPMENT DURING THE WARRANTY PERIOD HEREINAFTER DEFINED AND WHO USE SUCH WARRANTED EQUIPMENT IN THE PROJECT AND FOR THE PURPOSES FOR WHICH SUCH WARRANTED EQUIPMENT WAS ACQUIRED FROM THE SELLER. The Seller warrants its equipment to be free from defects in the material and workmanship under normal use and service for fifteen (15) months from date of shipment. Burner blast tube is warranted a full five (5) years. EXCLUDED FROM ANY COVERAGE UNDER THIS WARRANTY ARE DEFECTS IN WARRANTED EQUIPMENT FROM DAMAGE IN SHIPMENT, FAULTY INSTALLATION, LACK OF PROPER MAINTENANCE, CLOGGED OR DAMAGED FILTERS, MISUSE OR NEGLIGENCE. If any person becomes entitled to a claim under this warranty, such person shall, as a condition precedent to securing warranty performance, return the Warranted Equipment to the Seller's plant, 2001 South 21st Street, Parsons, Kansas, transportation prepaid. If the Warranted Equipment thus returned is found by the Seller to be defective for a cause and within a time covered by this Warranty, such equipment shall be repaired or replaced without charge; and returned to its owner or job site at the Seller's cost for transportation and handling. If inspection of the Warranted Equipment discloses defects not covered by this Warranty, the Seller shall notify the owner. Said equipment, at the owner's option (to be determined thirty (30) days from the date of notification), may be repaired or replaced at the expense of the owner and Seller's regular charges shall apply. Owner shall assume the cost for transportation and handling. Equipment, which is repaired or replaced, shall carry a warranty equal to the unexpired portion of the original warranty. The Seller will commence inspection of any Warranted Equipment returned to it for warranty claim within seven (7) working days after the arrival of such Warranty Equipment at Seller's plant, and shall complete any repairs required under this warranty within sixty (60) days after such arrival, unless Seller shall sooner notify said owner of reasonable cause for delay beyond control of Seller. Warranty obligations hereunder will be performed only between the hours of 9:00 a.m. and 4:00 p.m. Monday through Friday and excluding holidays. Any person believing himself entitled to warranty performance hereunder is required to notify the Quality Assurance or Service Department of Power Flame Incorporated, 2001 South 21st Street, Parsons, Kansas, prior to return of any Warranted Equipment for repair hereunder. IN ALL EVENTS, SELLER WILL NOT BE LIABLE FOR AND WILL NOT REIMBURSE ANY LABOR, MATERIAL, OR OTHER REPAIR CHARGES INCURRED BY ANYONE OTHER THAN SELLER ON ANY WARRANTY EQUIPMENT, UNLESS SUCH CHARGES HAVE BEEN SPECIFICALLY AUTHORIZED IN ADVANCE IN WRITING BY SELLER. ANY WARRANTY IMPLIED BY LAW WITH RESPECT TO THE MERCHANTABILITY OR FITNESS OF THE WARRANTED EQUIPMENT IS HEREBY LIMITED TO THE DURATION OF THE WARRANTY PERIOD HEREUNDER. THE SELLER WILL NOT IN ANY EVENT BE LIABLE FOR ANY INCIDENTAL OR CONSEQUENTIAL DAMAGES ATTRIBUTABLE TO THE WARRANTED EQUIPMENT.

Power Flame Incorporated

The Power to Manage Energy

2001 South 21st Street, Parsons, KS 67357
Telephone: 620-421-0480 FAX: 620-421-0948
Website: http://www.powerflame.com
e-mail: CSD@powerflame.com

MANUAL CM 07/05, Rpt. 1112

Printed in U.S.A.

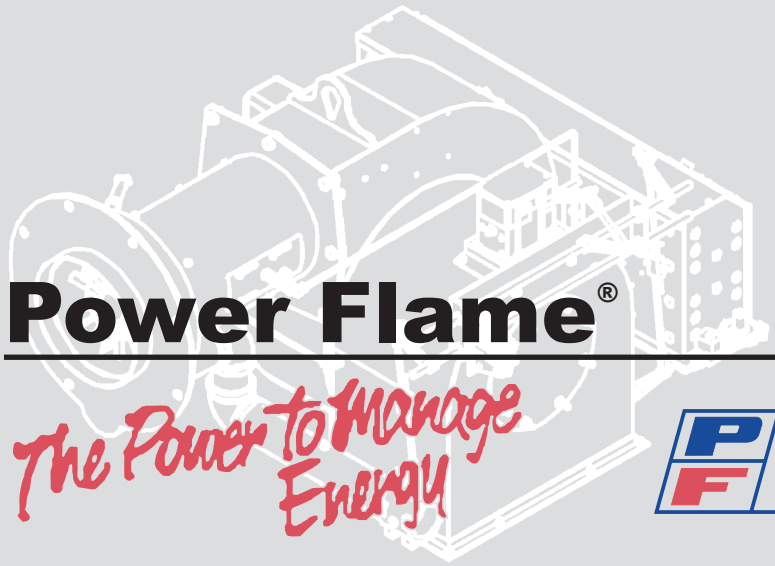

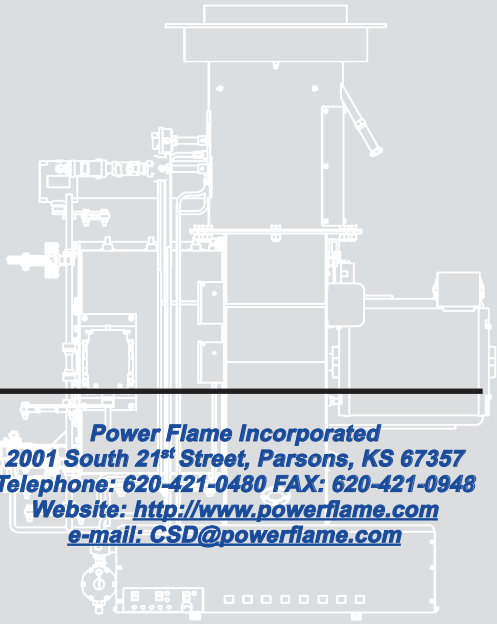

Power Flame®

The Power to Manage Energy

Power Flame Incorporated
2001 South 21st Street, Parsons, KS 67357
Telephone: 620-421-0480 FAX: 620-421-0948
Website: http://www.powerflame.com
e-mail: CSD@powerflame.com