xylem
Let's Solve Water

INSTRUCTION MANUAL
IM228R08

Model e-SV

INSTALLATION, OPERATION AND MAINTENANCE INSTRUCTIONS

GOULDS
WATER TECHNOLOGY
a xylem brand

Table of Contents

Owner's Information

Pump Model Number: _____

Pump Serial Number: _____

Control Model Number: _____

Dealer: _____

Dealer Phone No.: _____

Date of Purchase: _____ Installation: _____

Current Readings at Startup:

1 Ø		3 Ø	L1-2	L2-3	L3-1
Amps:	_____	Amps:	_____	_____	_____
Volts:	_____	Volts:	_____	_____	_____

e-SV Product Line
Numbering System for 1 – 22SV Liquid End Only

The various versions of the e-SV line are identified by a product code number on the pump label. This number is also the catalog number for the pump. The meaning of each digit in the product code number is shown below. **Note:** Not all combinations are possible.

Example Product Code

22 SV 0 2 F E 3 0 _ _

Special Configurations (optional Characters)

A = Jacketed Seal only	J = Horizontal mount + Passivation
B = Jacketed Seal + Passivation	K = Horizontal mount + Low NPSH
C = Jacketed Seal + Low NPSH	L = Horizontal mount + High Pressure
E = Electro-Polished	N = Low NPSH only
F = Destaged - 1 stage	P = Passivation only
G = Destaged - 2 stage	S = Customized Configuration
H = Horizontal mount only	Z = High pressure only

Seal Material

0 = Carb-SilCar-Viton (Standard)
1 = Carb-SilCar-AFLAS (HighTemp)
2 = SilCar-SilCar-Viton
4 = SilCar-SilCar-EPR
6 = Carb-SilCar-EPR

Pole-Hz-Phase

1 = 2–50	3 = 2–60
2 = 4–50	4 = 4–60

Motor Frame (NEMA)

A = 56C	E = 280TC
B = 180TC	F = 320TSC
C = 210TC	G = 360TSC
D = 250TC	H = 140TC

Configuration

			Top / Bottom
C = Clamp-316	P = Victaulic-316	R =	(SVC) 12Suct-12Disch
F = Round-304 (SVB)	T = Oval-304 (SVA)	W =	(SVC) 12Suct-03Disch
G = CI-304		X =	(SVC) 12Suct-06Disch
N = Round-316 (SVD)		Y =	(SVC) 12Suct-09Disch

Suction discharge location

Total Number of Impeller Stages (may be 1 or 2 characters)

Product Line:

SV – Stainless Vertical

Nominal Flow:

1 = 5 GPM	10 = 53 GPM
3 = 16 GPM	15 = 80 GPM
5 = 26 GPM	22 = 116 GPM

e-SV Product Line
Numbering System for 33 – 125SV Liquid End Only

The various versions of the e-SV line are identified by a product code number on the pump label. This number is also the catalog number for the pump. The meaning of each digit in the product code number is shown below. **Note:** Not all combinations are possible.

Example Product Code

125 SV 8 1 2 B F E 2 0 __

Special Configurations (optional Characters)

E = Electro-Polished
F = Destaged - 1 stage
G = Destaged - 2 stage
H = Horizontal mount only
J = Horizontal mount + Passivation
K = Horizontal mount + Low NPSH (33, 46, and 66 only)
L = Horizontal mount + High Pressure
N = Low NPSH only (33, 46, and 66 only)
P = Passivation only
S = Customized Configuration
Z = High pressure (250/300# pump body)

Seal Material

0 = Carb-SilCar-Viton
2 = SilCar-SilCar-Viton
4 = SilCar-SilCar-EPR
6 = Carb-SilCar-EPR
7 = Carb-SilCar-Viton (Cart)
8 = SilCar-SilCar-EPR (Cart)

Pole-Hz-Phase

1 = 2–50
2 = 4–50
3 = 2–60
4 = 4–60

Motor Frame (NEMA)

A = 56C
B = 180TC
C = 210TC
D = 250TC
E = 280TC
F = 320TSC
G = 360TSC
H = 140TC

Configuration

G = Round-CI-304
N = Round-316

125SV ONLY

Reduced Trim Diameter A = 141 mm B = 136 mm C = 145 mm (full dia.)
Blank if 33-92SV

Number of Reduced Trim Impellers (0, 1, 2)

Total Number of Impellers/Stages

Product Line: SV – Stainless Vertical

Nominal Flow:

33 = 175 GPM
46 = 240 GPM
66 = 350 GPM
92 = 485 GPM
125 = 660 GPM

e-SV Product Line
Numbering System for 1 – 22SV Pump & Motor Combination

The various versions of the e-SV line are identified by a product code number on the pump label. This number is also the catalog number for the pump. The meaning of each digit in the product code number is shown below. **Note:** Not all combinations are possible.

Example Product Code

2 SV 2 2 F A 2 F 5 1 A H

Special Configurations (1 or 2 Characters)

A = Jacketed Seal only
B = Jacketed Seal + Passivation
C = Jacketed Seal + Low NPSH
E = Electro-Polished
F = Destaged - 1 stage
G = Destaged - 2 stage
H = Horizontal mount only
J = Horizontal mount + Passivation
K = Horizontal mount + Low NPSH
L = Horizontal mount + High Pressure
M = i-Alert
N = Low NPSH only
P = Passivation only
S = Customized Configuration
Z = High Press (250/300# pump body)

Seal Material

0 = Carb-SilCar-Viton
1 = Carb-SilCar-AFLAS (HighTemp)
2 = SilCar-SilCar-Viton
4 = SilCar-SilCar-EPR
6 = Carb-SilCar-EPR

Motor Enclosure

1 = ODP
2 = TEFC
3 = X-Proof
4 = WD - Tropical
5 = Prem-ODP
6 = Prem-TEFC
7 = Prem-XP
8 = Prem-WD
9 = Marine
A = Chem
B = Prem-Chem
C = Class 1 Div 2

Voltage

A = 115/230
B = 230
C = 230/460
D = 460
E = 575
F = 208-230/460
G = 200
H = 190/380
J = 115/208-230
K = 208
L = 208-230
M = 190-380/415
N = 380
P = 110/220
R = 220
S = 415
T = 220/380 WYE
U = 380-660 WYE
V = 208-230/460 WYE

Pole-Hz-Phase

1 = 2-50-1
2 = 2-50-3
3 = 2-60-1
4 = 2-60-3
5 = 4-50-1
6 = 4-50-3
7 = 4-60-1
8 = 4-60-3

HP Rating

A = 0.50
B = 0.75
C = 1.00
D = 1.50
E = 2
F = 3
G = 5
H = 7.5
J = 10
K = 15
L = 20
M = 25
N = 30
P = 40

Configuration OPTION

C = Clamp-316
F = Round-304 (SVB)
G = CI-304
N = Round-316 (SVD)
P = Victaulic-316
T = Oval-304 (SVA)

	Top / Bottom
R =	(SVC) 12Suct-12Disch
W =	(SVC) 12Suct-03Disch
X =	(SVC) 12Suct-06Disch
Y =	(SVC) 12Suct-09Disch

Suction discharge location

Total Number of Impeller Stages (may be 1 or 2 characters)

Product Line:

SV – Stainless Vertical

Nominal Flow:

1 = 5 GPM
3 = 16 GPM
5 = 26 GPM
10 = 53 GPM
15 = 80 GPM
22 = 116 GPM

e-SV Product Line
Numbering System for 33 – 125SV Pump & Motor Combination

The various versions of the e-SV line are identified by a product code number on the pump label. This number is also the catalog number for the pump. The meaning of each digit in the product code number is shown below. **Note:** Not all combinations are possible.

Example Product Code

125 SV 8 2 A G K 3 F 2 0 _ _

Special Configurations (1 or 2 Characters)

E = Electro-Polished	L = Horizontal mount + High Pressure
F = Destaged - 1 stage	M = i-Alert
G = Destaged - 2 stage	N = Low NPSH only (33, 46 and 66 only)
H = Horizontal mount only	P = Passivation only
J = Horizontal mount + Passivation	S = Customized Configuration
K = Horizontal mount + Low NPSH	Z = High Press (250/300# pump body/Casing)

Seal Material

0 = Carb-SilCar-Viton	6 = Carb-SilCar-EPR
2 = SilCar-SilCar-Viton	7 = Carb-SilCar-Viton (Cart)
4 = SilCar-SilCar-EPR	8 = SilCar-SilCar-EPR (Cart)

Motor Enclosure

1 = ODP	5 = Prem-ODP	9 = Marine
2 = TEFC	6 = Prem-TEFC	A = Chem
3 = X-Proof	7 = Prem-XP	B = Prem-Chem
4 = WD - Tropical	8 = Prem-WD	C = Class 1 Div 2

Voltage

A = 115/230	H = 190/380	R = 220
B = 230	J = 115/208-230	S = 415
C = 230/460	K = 208	T = 220/380 WYE
D = 460	L = 208-230	U = 380-660 WYE
E = 575	M = 190-380/415	V = 208-230/460 WYE
F = 208-230/460	N = 380	
G = 200	P = 110/220	

Pole-Hz-Phase

1 = 2-50-1	4 = 2-60-3	7 = 4-60-1
2 = 2-50-3	5 = 4-50-1	8 = 4-60-3
3 = 2-60-1	6 = 4-50-3	

HP Rating

A = 0.50	G = 5	N = 30
B = 0.75	H = 7.5	P = 40
C = 1.00	J = 10	R = 50
D = 1.50	K = 15	S = 60
E = 2	L = 20	T = 75
F = 3	M = 25	U = 100

Configuration

G = Round-CI-304
N = Round-316

125SV ONLY

Reduced Trim Diameter A = 141 mm B = 136 mm C = 145 mm (full dia.)
Blank if 33-92SV

Number of Reduced Trin Impeller (0, 1, 2)

Total Number of Impeller Stages (may be 1 or 2 characters)

Product Line:

SV – Stainless Vertical

Nominal Flow:

33 = 175 GPM	92 = 485 GPM
46 = 240 GPM	125 = 660 GPM
66 = 350 GPM	

SAFETY INSTRUCTIONS

TO AVOID SERIOUS OR FATAL PERSONAL INJURY OR MAJOR PROPERTY DAMAGE, READ AND FOLLOW ALL SAFETY INSTRUCTIONS IN MANUAL AND ON PUMP.

THIS MANUAL IS INTENDED TO ASSIST IN THE INSTALLATION AND OPERATION OF THIS UNIT AND MUST BE KEPT WITH THE PUMP.

This is a **SAFETY ALERT SYMBOL.** When you see this symbol on the pump or in the manual, look for one of the following signal words and be alert to the potential for personal injury or property damage.

DANGER Warns of hazards that **WILL** cause serious personal injury, death or major property damage.

WARNING Warns of hazards that **CAN** cause serious personal injury, death or major property damage.

CAUTION Warns of hazards that **CAN** cause personal injury or property damage.

NOTICE: INDICATES SPECIAL INSTRUCTIONS WHICH ARE VERY IMPORTANT AND MUST BE FOLLOWED.

THOROUGHLY REVIEW ALL INSTRUCTIONS AND WARNINGS PRIOR TO PERFORMING ANY WORK ON THIS PUMP.

MAINTAIN ALL SAFETY DECALS.

WARNING

Hazardous fluids can cause fire, burns or death.

UNIT NOT DESIGNED FOR USE WITH HAZARDOUS LIQUIDS OR FLAMMABLE GASES. THESE FLUIDS MAY BE PRESENT IN CONTAINMENT AREAS.

OVERVIEW

The purpose of this manual is to provide the necessary information for proper installation, operation and maintenance of the e-SV pump. The instructions and warnings provided below concern the standard version, as described in the sale documents. Special versions may be supplied with supplementary instructions leaflets. Please refer to the sale contract for any modifications or special version characteristics. Always specify the exact pump type and identification code when requesting technical information or spare parts from our Sales and Service department. For instructions, situations or events not considered in this manual or in the sale documents, please contact your distributor.

Read this manual before installing and using the product. Improper use may cause personal injury and damage to property and lead to the forfeiture of the warranty coverage.

PRODUCT DESCRIPTION

The e-SV pump is a vertical multistage, non-self priming pump which can be coupled to standard electric motors. For the pump sizes 1SV-22SV, some of the metal parts that are in contact with the pumped liquid are made of stainless steel, others are made of cast iron. They are available in different versions according to the position of the suction and delivery ports and the shape of the connection flanges. For the sizes 33SV-125SV, some of the metal parts in contact with the pumped liquid are made of stainless steel, others are made of cast iron. A special version is available, in which all the metal parts in contact with the pumped liquid are made of stainless steel. If you purchase a pump without the electric motor, make sure that the motor you use is suitable for coupling to the pump. All e-SV pumps are equipped with a special mechanical seal designed for easy replacement without having to disassemble the entire pump.

APPLICATIONS

These pumps are suitable for civil and industrial water distribution systems, pressure booster, irrigation (agriculture, sporting facilities), water treatment, boiler feed, parts washing, cooling - air conditioning - refrigeration and fire fighting applications. The factory may be able to configure certain models for pumping liquids having atypical water and/or wastewater characteristics (e.g., acidic, basic, petrochemical or other non-aqueous liquids, etc.). Any such specialty use requires consultation with factory and engineering personnel for a detailed application-specific evaluation.

1. NAMEPLATE

Do not use this pump/electric pump unit to handle flammable and/or explosive liquids.

WARNING Do not use this pump to handle liquids containing abrasive, solid or fibrous substances.

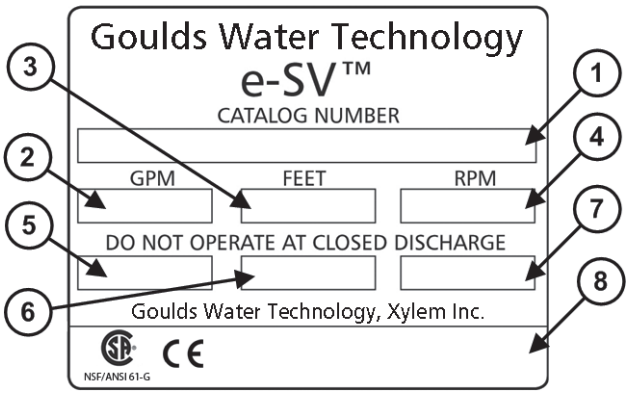

1	Goulds Water Technology Catalog Number
2	Capacity Range
3	TDH Range
4	Rated Speed
5	Rated Horsepower
6	Maximum Operating Pressure
7	Maximum Operating Temperature
8	Pump Serial Number

PRE-INSTALLATION CHECKS

Confirm that the pump is capable of meeting the desired operating conditions.

1. MINIMUM INLET (SUCTION) PRESSURE

In general, the minimum suction pressure required is that which provides adequate $NPSH_A$ necessary to feed the pump. The required NPSHr, expressed in feet, can be found on the performance curve for the pump at the specific duty point. It is recommended

that the $NPSH_A$ exceeds the NPSHr by a minimum of (2) two feet as a safety margin and to insure long term reliable performance of your e-SV pump.

$$P_{S_{MIN}} = NPSHr + 2\ ft.$$

NOTE: THE $NPSH_A$ MUST BE CALCULATED FOR THE SPECIFIC SYSTEM TO WHICH THE e-SV PUMP IS TO BE INSTALLED. PLEASE CONTACT YOUR DEALER/DISTRIBUTOR IF YOU REQUIRE ASSISTANCE.

2. SUCTION

In theory, a pump could suck water from a source located 10.33 meters lower than the pump's own installation level, but this does not happen because the pump offers its own intrinsic flow resistance, moreover the suction capacity is reduced as a result of flow resistance in the piping, height difference, liquid temperature and elevation above sea level.

A wrong choice in the altimetric placement of the pump could lead to cavitation.

With reference to Figure below and given Z as the maximum height the pump can be installed to, with reference to the level of the liquid source it can be stated the following:

In SI Units:

$Z = P_b \bullet 10{,}2 - NPSH - H_f - H_v - 0{,}5$ [m]

P_b = Barometric pressure [bar] (absolute)

$NPSH_r$ = NPSH required by pump [m]

H_f = Losses [m] in suction piping

H_v = Vapor pressure [m] at application temp [C]

1,5 = 1,5 [m] safety factor

In English Units:

$Z = P_b - NPSH_r - H_f - H_v - 1.5$

P_b = Barometric pressure [ft] (absolute)

$NPSH_r$ = NPSH required by pump [ft]

H_f = Losses [ft] in suction piping

H_v = Vapor pressure [ft] at application temp [F]

1.5 = 1.5 [ft] safety factor

With meanings given in the above table it can be stated that:
If $Z \geq 0$ pump can work with a maximum suction height equal to Z.

If $Z < 0$ pump must be provided of an inlet pressure equal to –Z.

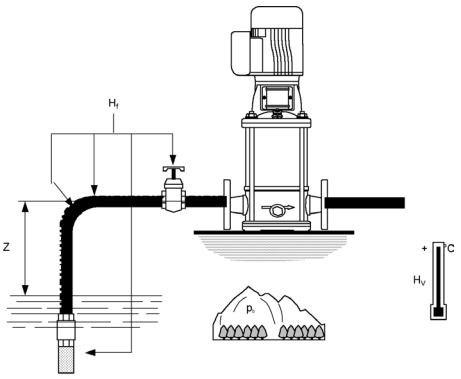

Temp		Hv	
C	F	m	ft
20	68	0.23	0.75
30	86	0.43	1.41
40	104	0.75	2.46
50	122	1.26	4.13
60	140	2.03	6.66
70	158	3.18	10.43
80	176	4.83	15.84
90	194	7.15	23.45
100	212	10.34	33.92
110	230	14.61	47.92
120	248	20.27	66.49

⚠WARNING Do not use the pump if cavitation occurs, as its internal components could be damaged.

⚠WARNING If hot water is pumped, guarantee an appropriate condition on the suction side to prevent cavitation.

⚠WARNING Make sure that the sum of the pressure on the suction side (water system, gravity tank) and the maximum pressure delivered by the pump does not exceed the maximum working pressure allowed (nominal pressure PN) for the pump.

3. MAXIMUM INLET PRESSURE, 60 HZ

$p_{1max} \leq PN - pmax$

Having the following meaning of the symbols:

p_{max} = Maximum pressure delivered by the pump

p_{1max} = Maximum inlet pressure

PN = Maximum operating pressure

If a motor with an axially locked shaft (standard) is used, be sure that the above formula is fulfilled, if not please contact the Sales and Service Department.

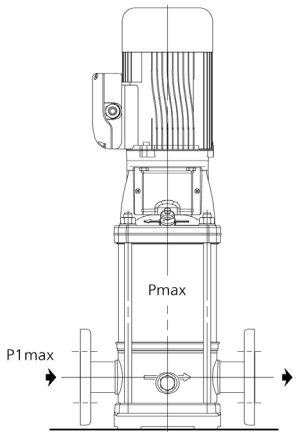

The following table shows the maximum permissible inlet pressure. However, the actual inlet pressure + pressure against a closed valve must always be lower than the maximum permissible operating pressure.

Pump	Stages	P_{1max} (psig)
1SV	2-5 6-10 11-30	145 218 PN-Pmax
3SV	2-3 4-7 8-30	145 218 PN-Pmax
5SV	2-3 4-6 7-27	145 290 PN-Pmax
10SV	1-2 3-5 6-20	145 290 PN-Pmax
15SV	1-2 3 4-15	145 290 PN-Pmax
22SV	1-2 3 4-12	145 290 PN-Pmax

Pump	Stages	P_{1max} (psig)
33SV	1/1-2/2 2/1-5/2 5/1-7/2 7/1-10	45 145 218 PN-Pmax
46SV	1/1-1 2/2-2 3/2-4/1 4-10/2	145 218 290 PN-Pmax
66SV	1/1-3/2 3/1-4/1 4-5/1 5-6	72 145 218 PN-Pmax
92SV	1/1-2/2 2/1-3/2 3/1-3 4/2-5/1	72 145 218 PN-Pmax
125SV	1-3/3B 3-5/5A	290 PN-Pmax

4. MAXIMUM OPERATING PRESSURE

(staging at 3500 RPM)

Pump	Stages	PSI / Bar
1SV	1-29	362 / 25
	30	580 / 40
3SV	1-23	362 / 25
	24-30	580 / 40
5SV	1-23	362 / 25
	24-27	580 / 40
10SV	1-14	362 / 25
	15-20	580 / 40
15SV	1-11	362 / 25
	12-15	580 / 40
22SV	1-11	362 / 25
	12	580 / 40
33SV	1-6	362 / 25
	7-10	580 / 40
46SV	1-5	362 / 25
	6-10	580 / 40
66SV	1-5	362 / 25
	6	580 / 40
92SV	1-5	362 / 25
125SV	1-6	362 / 25

NOTE: Oval flange (1-22SV) maximum working pressure is 232 psi (16 bar).

5. TEMPERATURE CAPABILITY

The e-SV pump is capable of pumping liquids within the below temperature range:

Standard Seal
1SV-22SV -22°F to 250°F (-30°C to 120°C)
33SV-125SV -22°F to 250°F (-30°C to 120°C)
High Temperature Seal
1SV-22SV -22°F to 300°F (-30°C to 149°C)
33SV-125SV N/A

NOTE: In order to provide adequate cooling for the electric motor, the ambient temperature must be 32° F to 104° F and the relative humidity at 104° F must not exceed 50%.

For temperatures above 104° F and for installations sites located at elevation in excess at 3000 feet above sea level it may be necessary to derate the motor performance. Please contact your distributor/dealer for assistance.

6. MINIMUM NOMINAL FLOW RATE

To prevent overheating of the internal pump components, make sure that a minimum water flow is always guaranteed when the pump is running.

For continuous operation the minimum flow rate recommended is specified below.

Pump Size	Minimum Flow GPM			
	3500 RPM	1750 RPM	2900 RPM	1450 RPM
1SV	2	1	2	1
3SV	3	2	3	2
5SV	7	4	6	3
10SV	9	5	8	4
15SV	18	9	15	7
22SV	21	11	18	9
33SV	35	18	8	4
46SV	40	20	10	5
66SV	70	35	14	7
92SV	100	50	20	10
125SV	128	64	106	53

NOTE: If this cannot be achieved, then a bypass/recirculate line is recommended.

⚠WARNING **Do not run the pump against a closed discharge for longer than a few seconds.**

7. NUMBER OF STARTS PER HOUR

For electric pumps coupled to motors supplied by Goulds Water Technology, the maximum number of work cycles (starts and stops) in one hour are as follows:

HP	Max. Starts Per Hour*	Min. Run Time Between Starts (sec)
0.5	24	120
0.75	24	120
1	15	75
1.5	13	76
2	12	77
3	9	30
5	8	83
7.5	7	88
10	6	92
15	5	100
20	5	110
25	5	115
30	4	120
40	4	130
50	3	145
60	3	170
75	3	180

** For more details, refer to technical manual.*

⚠WARNING **If you use a different motor from the standard one supplied by Goulds Water Technology, please consult with the motor manufacturer to find out the maximum number of work cycles allowed.**

8. POWER SUPPLY REQUIREMENTS

⚠WARNING **Make sure that the supply voltages and frequencies are suited to the characteristics of the electric motor. Check the motor rating plate.**

In general, the supply voltage tolerances for motor operation are as follows:

Hz	Phase	U_N	
		V	±%
60	1	230	10
60	3	230 / 460	10
60	3	460	10

TRANSPORTATION AND STORAGE

1. TRANSPORTATION AND HANDLING OF PACKED PRODUCT

⚠WARNING The e-SV pump is packed in cartons or wooden crates having different dimensions and shapes.

Some cartons (the supporting base is made of wood) are designed to be transported and handled in the vertical position. Other cartons, as well as the wooden crates, are designed to be transported and handled in the horizontal position. Protect the product against humidity, heat sources and mechanical damage (collisions, falls, ...). Do not place heavy weights on the cartons.

Lift and handle the product carefully, using suitable lifting equipment. Observe all the accident prevention regulations.

When you receive the pump, check the outside of the package for evident signs of damage. If the product bears visible signs of damage, notify our distributor within 8 days from the delivery date.

2. STORING THE PACKED PRODUCT

Ambient temperature 32° F to 104° F.

Short Term: (Less than 6 months) Goulds Water Technology normal packaging procedure is designed to protect the pump during shipping. Upon receipt, store in a covered and dry location.

Long Term: (More than 6 months) Rotate shaft several times every 3 months. Refer to driver and coupling manufacturers for their long term storage procedures. Store in a covered dry location.

3. UNPACKING THE PRODUCT

Use suitable equipment. Observe all the accident prevention regulations in force. Lift and handle the product carefully, using suitable lifting equipment.

When you receive the pump, check the outside of the package for evident signs of damage. If the product bears visible signs of damage, notify our distributor within 8 days from the delivery date.

4. HANDLING THE PRODUCT

Lift and handle the product carefully, using suitable lifting equipment. Observe the accident prevention regulations in force.

The product must be securely harnessed for lifting and handling. Some electric pumps have eyebolts that can be used for this purpose.

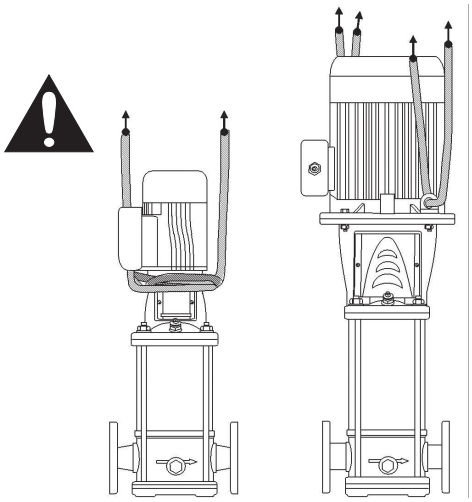

INSTALLATION

The installation operations must be carried out by qualified and experienced personnel. Use suitable equipment and protections. Observe the accident prevention regulations in force.

Always refer to the local and/or national regulations, legislation and codes in force relating to the selection of the installation site and the water and power connections.

1. SITE SELECTION

Make sure that no obstructions or obstacles hinder the normal flow of the cooling air delivered by the motor fan. Make sure there is adequate clearance around the pump for the maintenance operations. Whenever possible, raise the pump slightly from the level of the floor. See the figures below and at the top of the next column for possible installation configurations. Horizontal operation requires special mounting with a horizontally configured pump.

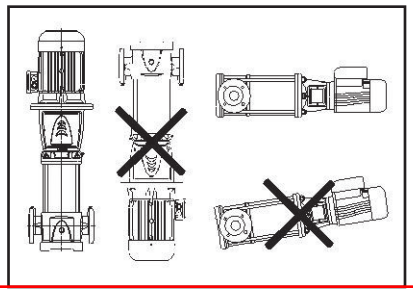

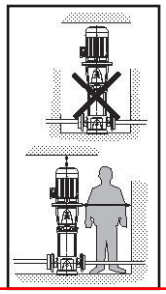

2. ANCHORING

The pump must be anchored securely with bolts to a concrete foundation or equivalent metal structure (shelf or platform). If the pump is large-sized and needs to be installed near rooms inhabited by people, suitable vibration-damping supports should be provided to prevent the transmission of the vibrations from the pump to the reinforced concrete structure. The dimensions of the pump base and anchoring holes are shown.

	1SV-5SV	10SV-22SV	33SV	46SV-92SV	125SV
	in (mm)				
L1	3.94 (100)	5.12 (130)	6.69 (170)	7.48 (190)	10.83 (275)
L2	7.09 (180)	8.46 (215)	9.45 (240)	10.43 (265)	14.96 (380)
L3	5.91 (150)	7.28 (185)	8.66 (220)	9.45 (240)	12.99 (330)
L4	8.27 (210)	9.65 (245)	11.42 (290)	12.4 (315)	17.72 (450)
Ø A	0.51 (13)		0.59 (15)		0.75 (19)
N	0.16(4)				

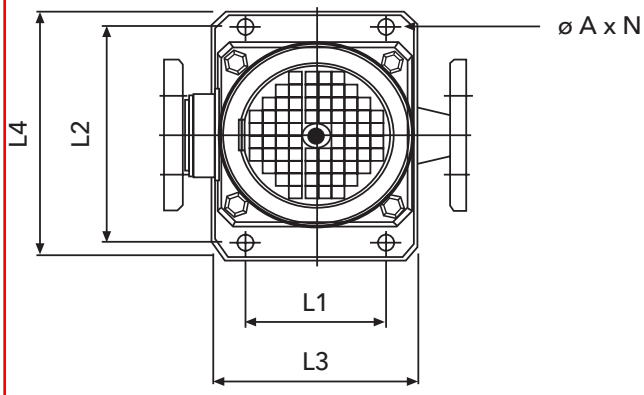

3. FLANGE ALIGNMENT AND LOADING

Angular alignment of the suction and discharge flanges can best be accomplished using calipers at the bolt locations. See figure below.

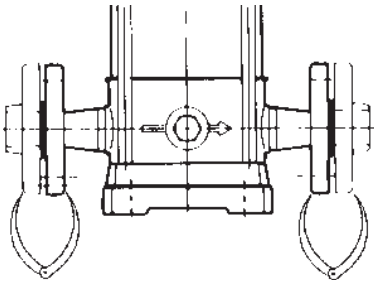

NOTICE: DO NOT DRAW PIPING INTO PLACE BY FORCING THE PUMP SUCTION OR DISCHARGE CONNECTIONS.

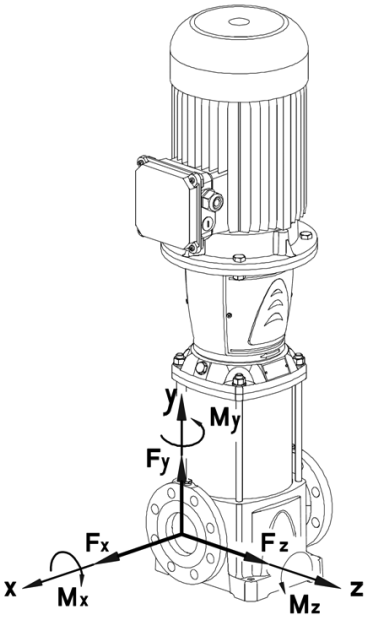

4. PIPING

Discharge and suction piping should be no smaller than the respective pump opening and should be kept as short as possible, avoiding unnecessary fittings to minimize friction losses.

NOTICE: PIPING MUST BE INDEPENDENTLY SUPPORTED AND NOT PLACE ANY PIPING LOADS ON THE PUMP.

If suction piping larger than pump suction is required, an eccentric pipe reducer, **WITH THE STRAIGHT SIDE UP**, must be installed at the pump suction.

If the pump is installed below the liquid source, install a full flow isolation valve in the suction piping for pump inspection or maintenance.

NOTICE: DO NOT USE THE ISOLATION VALVE ON THE SUCTION SIDE OF THE PUMP TO THROTTLE PUMP. THIS MAY CAUSE LOSS OF PRIME, EXCESSIVE TEMPERATURES, DAMAGE TO PUMP AND VOID WARRANTY.

If pump is installed above the liquid source, the following **MUST** be provided:

To avoid air pockets, no part of the suction piping should be above the pump suction.

On any horizontal piping sections, slope piping upward from liquid source.

All suction pipe joints **MUST** be airtight.

Use a foot valve for priming, or for holding prime during intermittent duty.

The suction strainer or suction bell **MUST** be at least 3 times the suction pipe diameter.

Insure that the size and minimum liquid submergence, over the suction inlet, is sufficient to prevent air from entering through a suction vortex. See typical suction piping Figures 1 through 4.

Install a discharge check valve, suitable to handle the flow and liquids, to prevent backflow.

Install an appropriately sized gate valve, **AFTER** the discharge valve, to regulate the pump capacity, for pump inspection and for maintenance.

When a pipe increaser is required, install between the check valve and the pump discharge.

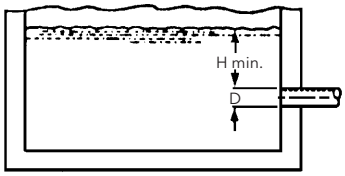

Figure 1

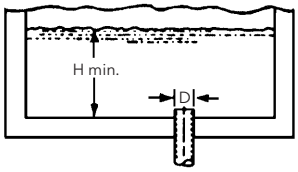

Figure 2

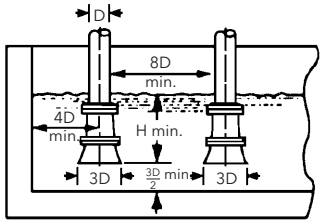

Figure 3

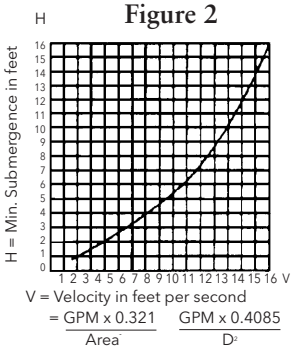

Figure 4

5. SHAFT ALIGNMENT – MOTOR TO PUMP

When the pump is purchased less motor, the pump will be supplied with a motor assembly shim positioned between the motor adapter and the coupling.

To assemble the motor to the pump remove the plastic shipping straps, the 2 stainless steel coupling guard halves, and the expanded polyurethane.

Insure that the motor assembly shim is properly positioned between the coupling and the motor adapter. If the motor assembly shim is not available, a 0.203" (5 mm) shim may be used to locate the pump shaft assembly and to set the correct height. See figures below.

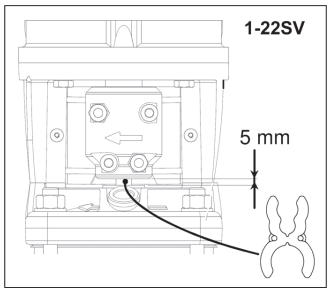

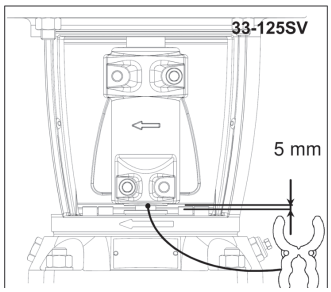

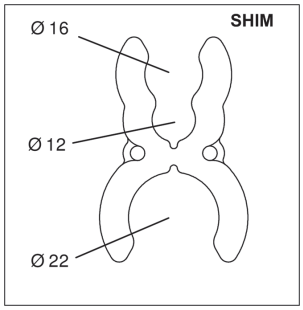

For 1-22SV pumps using motor frame sizes 213TC – 256TC, place adapter ring on top flange of motor adapter. For 33-125SV pumps using motor frame sizes 284TC – 286TC, motor frame sizes 213TC and larger, attach the motor adapter flange to the motor using 4 hex cap screws. Torque to values shown in the **"ENGINEERING DATA"** section of this manual.

Loosen the 4 coupling socket head screws enough to provide an adequate opening in the coupling to receive the motor shaft.

With an adequately sized crane, carefully lower the motor assembly onto the pump motor adapter and into the coupling. Secure the 4 motor hex cap screws, torquing to the value provided in the **"ENGINEERING DATA"** section of this manual.

Torque the 4 coupling socket head screws to the value provided in **"ENGINEERING DATA"** section of this manual. After assembly, the gap between the coupling halves should be equal.

For the 33 through 125SV sizes using a cartridge seal, after coupling bolts have been properly torqued, there are four set screws on the collar of the cartridge seal that require tightening before removing the shim. The four hex head set screws require a 1/8" allen wrench and are to be tightened hand-tight approximately 5 lbs.-ft. (7 N•m).

Remove the motor assembly shim and retain for future use.

Install the 2 coupling guard halves.

START-UP

1. WATER CONNECTION

The water connections must be made by qualified installation technicians in compliance with the regulations in force.

In case of connection to the water system, the regulations issued by the competent authorities (municipal, public utility company) must be observed. Authorities often require the installation of a backflow prevention device, such as a disconnector, check valve or disconnection tank.

2. WIRING AND GROUNDING

Install, ground and wire according to local and National Electrical Code requirements.

Install an all leg disconnect switch near pump.

Disconnect and lockout electrical power before installing or servicing pump.

Electrical supply **MUST** match pump's nameplate specifications. Incorrect voltage can cause fire, damage motor and voids warranty.

Motors equipped with automatic thermal protectors open the motor's electrical circuit when an overload exists. This can cause the pump to start unexpectedly and without warning.

Use only stranded copper wire to motor and ground. Wire size **MUST** limit the maximum voltage drop to 10% of the motor nameplate voltage, at the motor terminals. Excessive voltage drop will affect performance and void motor warranty. The ground wire must be at least as large as the wires to the motor. Wires should be color coded for ease of maintenance.

Three phase motors require all leg protection with properly sized magnetic starters and thermal overloads.

WARNING Hazardous voltage

PERMANENTLY GROUND THE PUMP, MOTOR AND CONTROLS PER NEC OR LOCAL CODES BEFORE CONNECTING TO ELECTRICAL POWER. FAILURE TO DO SO CAN CAUSE SHOCK, BURNS OR DEATH.

Connect the electrical leads to the motor, as follows:

Single Phase Motors – Connect the BLACK wire to the BLACK motor wire. Connect the WHITE wire to the WHITE motor wire. Connect the GREEN wire to the GREEN motor wire.

Three Phase Motors – See figure below.

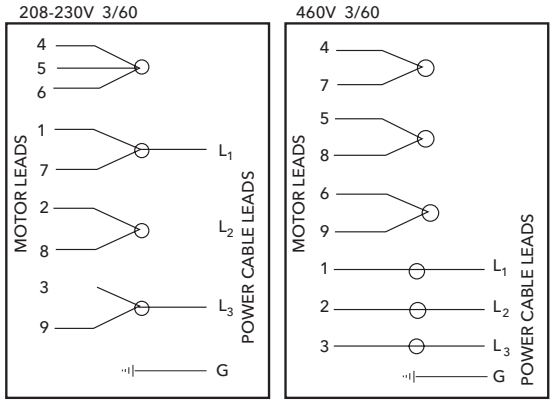

THREE PHASE MOTOR WIRING DIAGRAM

NOTICE: UNIT ROTATION IS DETERMINED WHEN VIEWED FROM MOTOR END. SEE PAGE 17 FOR MOTOR ROTATION DETAIL. INCORRECT ROTATION MAY CAUSE DAMAGE TO THE PUMP AND VOIDS WARRANTY.

Check pump rotation by observing the motor fan or the coupling **THROUGH** the coupling guard. **DO NOT** confuse the flow arrows, stamped on the pump body, with the rotation arrows on the coupling and motor adapter. Three phase motors only – If rotation is incorrect, have a qualified electrician interchange any two of the three power cable leads.

3. **PRIMING/VENTING**

For installations with the liquid level above the pump:

Close the discharge valve.

Remove the vent plug.

For models 1SV, 3SV and 5SV only, it is necessary to fully unscrew the pin located in the drain plug. See figures below.

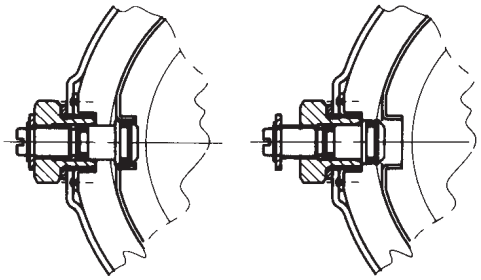

DRAIN PLUG WITH PIN CLOSED

DRAIN PLUG WITH PIN OPEN

For sizes 10SV-125SV the vent plug is supplied with an internal needle valve, so it is not necessary to remove the vent plug. Simply unscrew the needle valve half way to open the valve to allow air to escape. (For sizes 33SV-92SV, if the pump is supplied with a cartridge seal, remove the vent plug located on the gland plate beneath the coupling.)

Open the suction valve until liquid flows out of the vent plug opening.

NOTICE: DO NOT REMOVE AND REPLACE DRAIN PLUG WITH ANOTHER PLUG OR PIPING FIXTURE FROM ANY OTHER MANUFACTURER, OR SIGNIFICANT LOSS OF PUMP PERFORMANCE MAY OCCUR AS A RESULT.

NOTE: Place a loose rag over the open vent port to prevent large amounts of liquid from being sprayed on the pump and adjacent equipment.

Care should be exercised if you are pumping hot water or chemicals to avoid personal injury.

Install and torque the vent plug to the values provided in the **"ENGINEERING DATA"** section of this manual. Close the drain plug pin (1SV, 3SV and 5SV only) and open the discharge valve.

For installations with the liquid level below the pump:

Install foot valve at suction end.

For models 1SV, 3SV and 5SV only, it is necessary to fully unscrew the pin located in the drain plug. See figures above.

With the provided plastic funnel, completely fill the casing with liquid.

Install and torque the vent plug, close the drain plug pin (1SV, 3SV and 5SV only) and open the suction valve.

OPERATION

DO NOT OPERATE UNIT WITHOUT SAFETY GUARD IN PLACE. TO DO SO CAN CAUSE SEVERE PERSONAL INJURY.

NOTICE: PUMP MUST BE COMPLETELY PRIMED BEFORE OPERATION.

DO NOT OPERATE PUMP AT OR NEAR ZERO FLOW. TO DO SO CAN CAUSE EXTREME HEAT, DAMAGE TO THE PUMP, INJURY OR PROPERTY DAMAGE.

Start the pump, keeping the on-off valve downstream from the pump closed. Open the on-off valve gradually. The pump must run smoothly and noiselessly. If necessary, reprime the pump. Check the current absorbed by the motor and, if necessary, adjust the setting of the thermal relay. Any air pockets trapped inside the pump may be released by loosening the air screw for all e-SV pumps.

WARNING **If a pump installed in a location where freezing may occur remains inactive, you must drain it through the drain plugs. This operation is not necessary if a suitable antifreeze has been added to the water.**

Make sure that the drained liquid does not cause damage or injuries.

After stabilizing the system at normal operating conditions, check piping for correct alignments. If necessary, adjust pipe supports.

WARNING Hazardous machinery

HAZARDOUS MACHINERY. MOTOR THERMAL PROTECTORS CAN RESTART MOTOR UNEXPECTEDLY AND WITHOUT WARNING, CAUSING SEVERE PERSONAL INJURY.

See the **"ENGINEERING DATA"** section in this manual for the recommended maximum pump starts per hour.

MAINTENANCE

WARNING Hazardous voltage

DISCONNECT AND LOCKOUT ELECTRICAL POWER BEFORE ATTEMPTING ANY MAINTENANCE. FAILURE TO DO SO CAN CAUSE SHOCK, BURNS OR DEATH.

MOTOR LUBRICATION

Recommended Motor Bearing Lubrication Intervals

Interval	Service Environment
1 – 2 Years	Light Duty in Clean Atmosphere
1 Year	8 – 16 hours/day – Clean, Dry Atmosphere
6 Months	12 – 24 hours/day – Moisture Present
3 Months	12 – 24 hours/day – Dirty, High Moisture

When lubricants are operated at elevated temperatures, the lubrication frequency should be increased.

DO NOT intermix grease bases (lithium, sodium, etc.). Completely purge old grease if changing grease base.

Over greasing can cause excessive bearing temperatures, lubricant and bearing failure.

MECHANICAL SEAL REPLACEMENT

(e-SV 1–125)

1. Close all necessary suction and discharge valves to isolate the pump from the system.
2. Drain the liquid from the pump by removing the drain plug and opening the needle valve on the vent plug.
3. Remove the coupling guards, the 4 coupling hex cap screws, the coupling and coupling drive pin. See 1-3, Figure 5.
4. Remove the 4 motor hex cap screws (inner screws) on the seal housing. See step 4.
5. Remove the seal housing plate on 33-125SV models, using the two tapped holes provided. Threading 2 of the hex cap screws into these holes and evenly tightening the screws. Lift and remove the seal housing between the pump and motor shaft. Exercise care when sliding the seal housing between the shaft to prevent damage to the stationary seat. See step 5.
6. Turn the seal housing upside down and remove the stationary seat and o-ring. Remove and discard the large o-ring used to seal the seal housing to the pump head. Inspect the seal seat for any burrs or debris. Make sure that the seat is clean. Lubricate the shaft or sleeve lightly. Use a water-based lubricant. Install the new seat by pressing the seal housing with your thumb. DO NOT USE EXCESSIVE FORCE and, if possible, place a clean soft cloth over the seal face to protect the seal faces during installation.
7. Remove the rotary portion at the mechanical seal by sliding the rotary unit axially upwards along the pump shaft. Inspect the pump shaft for any burns or debris. Any burrs should be ground smooth with (fine grit) emery paper. See step 7 in Figure 5.
8. Lubricate the o-ring located in the ID of the rotary unit of the mechanical seal with a lubricant compatible with the seal elastomers. Carefully slide the rotary unit of the mechanical seal down the shaft. Rotate the seal to locate the pin on the bottom of the seal with the holes in the shaft sleeve (33-125SV only). Cycle seal up and down to lubricate o-ring and prevent seal from sticking to shaft. See step 8 in Figure 5.
9. Install a new seal housing o-ring on the seal housing. A lubricant can be used to hold the o-ring on the diameter of the seal housing.

   Carefully reinstall the seal housing between the pump and motor shaft and slide the seal housing down the shaft into position. **Use caution when mounting the seal housing between the pump/motor shaft so that the seal face on the stationary seat is not damaged.** See step 9 in Figure 5.
10. Reinstall the 4 hex cap screws, tightening the screws evenly and then torquing them to the values given in the engineering data. See step 10 in Figure 5.
11. Reinstall the coupling pin and locate the space shim on the shaft on the seal housing. **If the shim is not available, a 5 mm spacer can be used.** See step 11 in Figure 5.
12. Reinstall the coupling halves and evenly tighten the coupling bolts and torque them to the values given in the coupling section. Remove the spacer shim and save for future use. See step 12 in Figure 5.
13. Rotate the shaft by hand to insure that the pump and motor rotate freely. Reinstall the coupling guard.
14. The pump and system should be vented prior to starting the pump. See Section 3, page 13, for venting procedures.

MECHANICAL SEAL REPLACEMENT

(Sizes 33SV-125SV) Fitted with Cartridge Seals

1. Complete steps 1-4 as defined above for conventional seals.
2. Loosen the 4 set screws located around the ID of the pump shaft.
3. Remove the cartridge seal using the two tapped holes provided on the gland of the cartridge seal by threading two of the hex cap screws into these holes and evenly tightening these screws. Lift and remove the cartridge seal between the pump and motor shaft.
4. Inspect the pump shaft for any burrs or debris. Any burrs should be ground smooth with (fine grit) emery paper.
5. Install a new o-ring on the turned fit of the new cartridge seal. Lubricate the o-ring located in the ID of the cartridge seal. Use a lubricant compatible with the seal elastomers to hold the o-ring.
6. Install the new cartridge seal on the pump by carefully sliding it between the pump and motor shaft and then sliding it into position.
7. Complete steps 11-14 as defined above for the conventional seals.
8. After installing the coupling, tighten the four set screws located in the collar of the cartridge seal to secure the seal to the pump shaft.
9. Rotate the shaft by hand to insure that the pump and motor rotate freely. Reinstall the coupling guard.
10. Use vent connections on cartridge seal for proper venting.

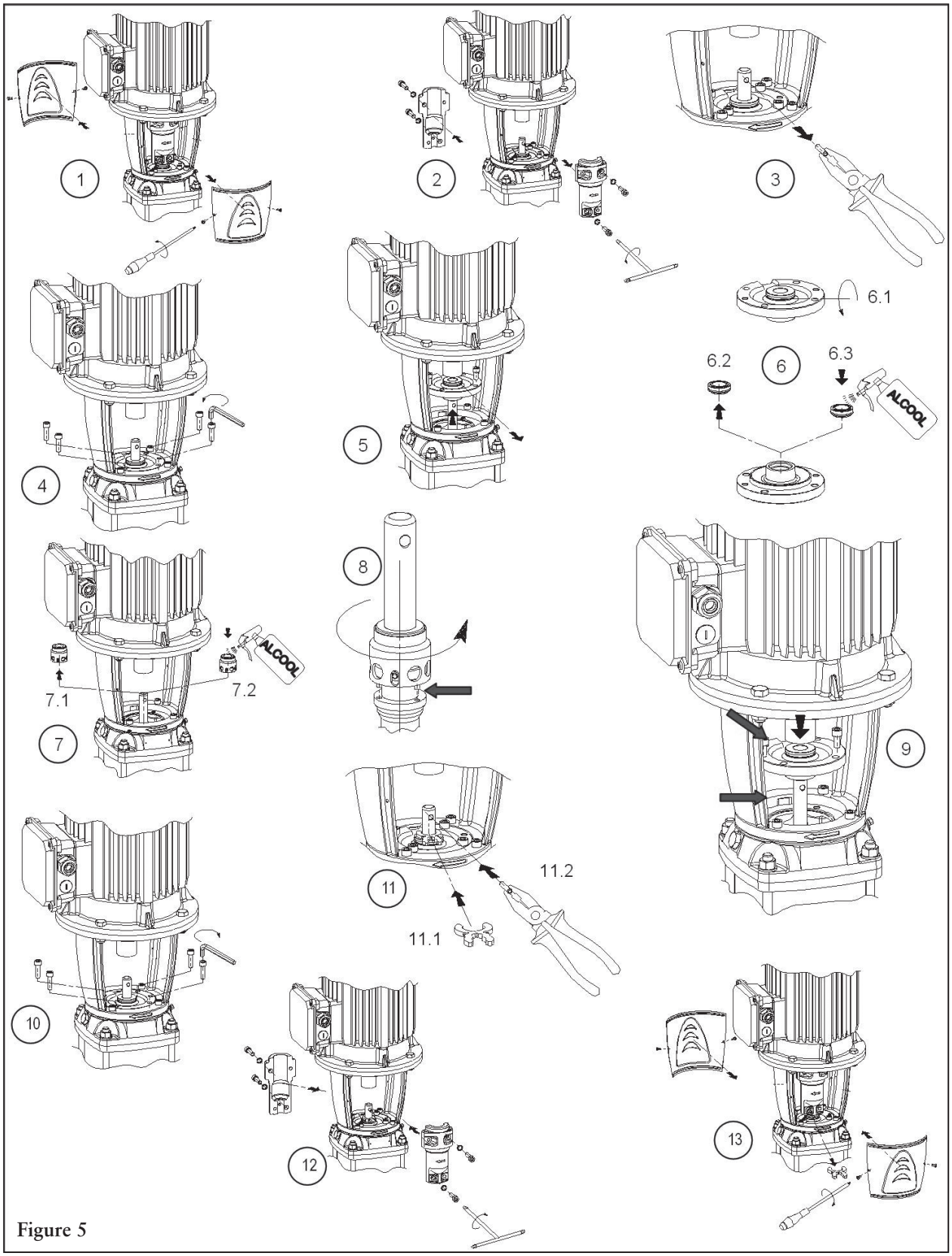

Figure 5

MOTOR REPLACEMENT

To remove the motor follow steps 1 through 4, as provided in the **"MECHANICAL SEAL REPLACEMENT"** section of this manual.

For motor frames 213TC and larger, remove the 4 motor hex cap screws and the motor adapter.

Install the motor adapter flange onto the new motor, torquing the 4 hex cap screws to the values provided in the **"ENGINEERING DATA"** section of this manual.

Complete the reassembly following steps 17 through 22 in the **"MECHANICAL SEAL REPLACEMENT"** section of this manual.

All additional unit service or maintenance, not addressed in this manual, should be performed at a qualified service location. Contact your local dealer or Goulds Water Technology distributor for assistance.

TROUBLESHOOTING GUIDE

⚠WARNING Hazardous voltage

DISCONNECT AND LOCKOUT ELECTRICAL POWER BEFORE ATTEMPTING ANY MAINTENANCE. FAILURE TO DO SO CAN CAUSE SHOCK, BURNS OR DEATH.

SYMPTOM

MOTOR NOT RUNNING
See Probable Cause – 1 through 5

LITTLE OR NO LIQUID DELIVERED BY PUMP
See Probable Cause – 6 through 12

POWER CONSUMPTION TOO HIGH
See Probable Cause – 3, 12, 13, 15

EXCESSIVE NOISE AND VIBRATION
See Probable Cause – 3, 6 - 8, 10, 12, 13, 16

PROBABLE CAUSE

1. Motor thermal protector tripped.
2. Open circuit breaker or blown fuse.
3. Impellers binding.
4. Motor improperly wired.
5. Defective motor.
6. Pump is not primed, air or gases in liquid.
7. Discharge, suction plugged or valve closed.
8. Incorrect rotation (three phase only).
9. Low voltage or phase loss.
10. Impellers worn or plugged.
11. System head too high.
12. $NPSH_A$ too low – excessive suction lift or losses.
13. Discharge head too low – excessive flow rate.
14. Fluid viscosity, specific gravity too high.
15. Worn bearing.
16. Pump, motor or piping loose.

ENGINEERING DATA

TORQUE VALUES

HP	Motor Bolt	Adapter Flange	Coupling		
			1-5SV	10-22SV	33-92SV
0.75-7.5 HP	20 lbs ft (27 N·m)	–	15 lbs ft (20 N·m)	40 lbs ft (54 N·m)	37 lbs ft (50 N·m)
10-75 HP	45 lbs ft (61 N·m)	48 lbs ft (65 N·m)*	15 lbs ft (20 N·m)	40 lbs ft (54 N·m)	48 lbs ft (65 N·m)

*213TC and 215TC Adapter Flange use 30 lbs ft (40 N m)

TORQUE VALUES

Pump Size	Tie Rod Nuts	Vent and Drain
1-5SV	18 lbs ft (24 N·m)	18 lbs ft (24 N·m)
10-22SV	22 lbs ft (30 N·m)	18 lbs ft (24 N·m)
33-125SV	44 lbs ft (60 N·m)	30 lbs ft (41 N·m)

VENT NEEDLE

Pump Size	
1-5SV	7 lbs ft (9.5 N·m)
10-22SV	
33-125SV	

TYPICAL PLUMBING AND INSTALLATION

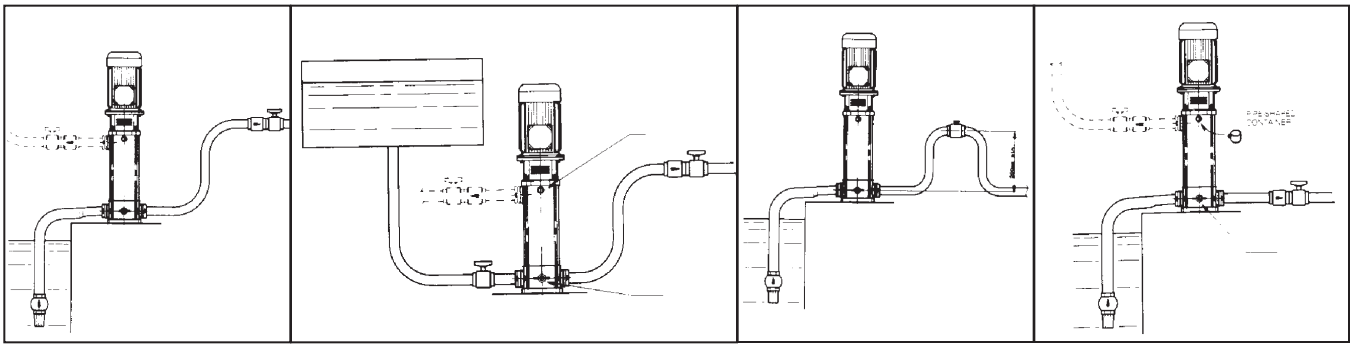

NOTE: Discharge loop must be high enough to keep liquid in the bottom stages during shut-down.

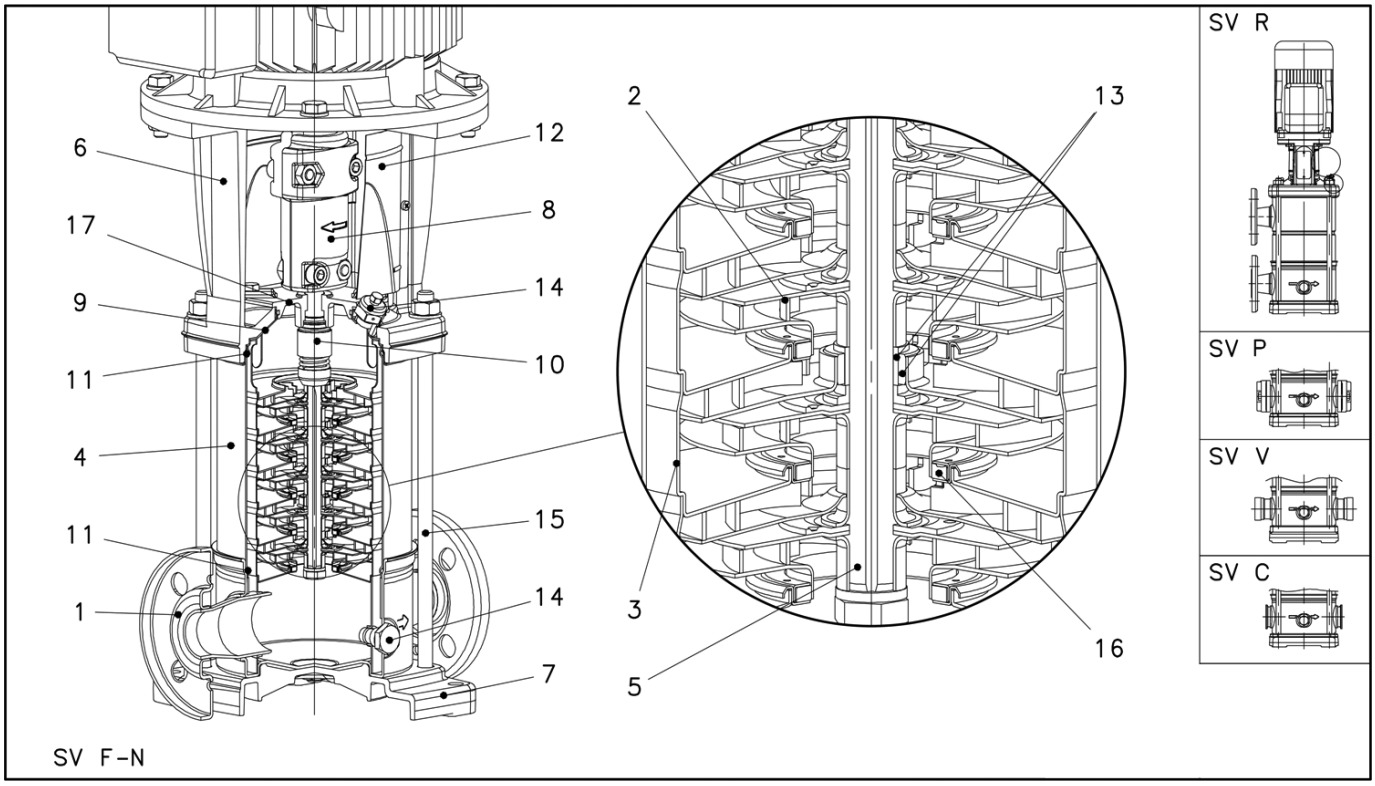

1 Pump Body
2 Impeller
3 Diffuser
4 Casing
5 Shaft
6 Adapter
7 Base
8 Coupling
9 Seal Plate
10 Mechanical Seal
11 Elastomers
12 Coupling Guard
13 Shaft Sleeve and Bushing
14 Fill/Drain Plugs
15 Tie Rods
16 Wear Ring
17 Seal Gland

33SV - 92SV MAJOR COMPONENTS

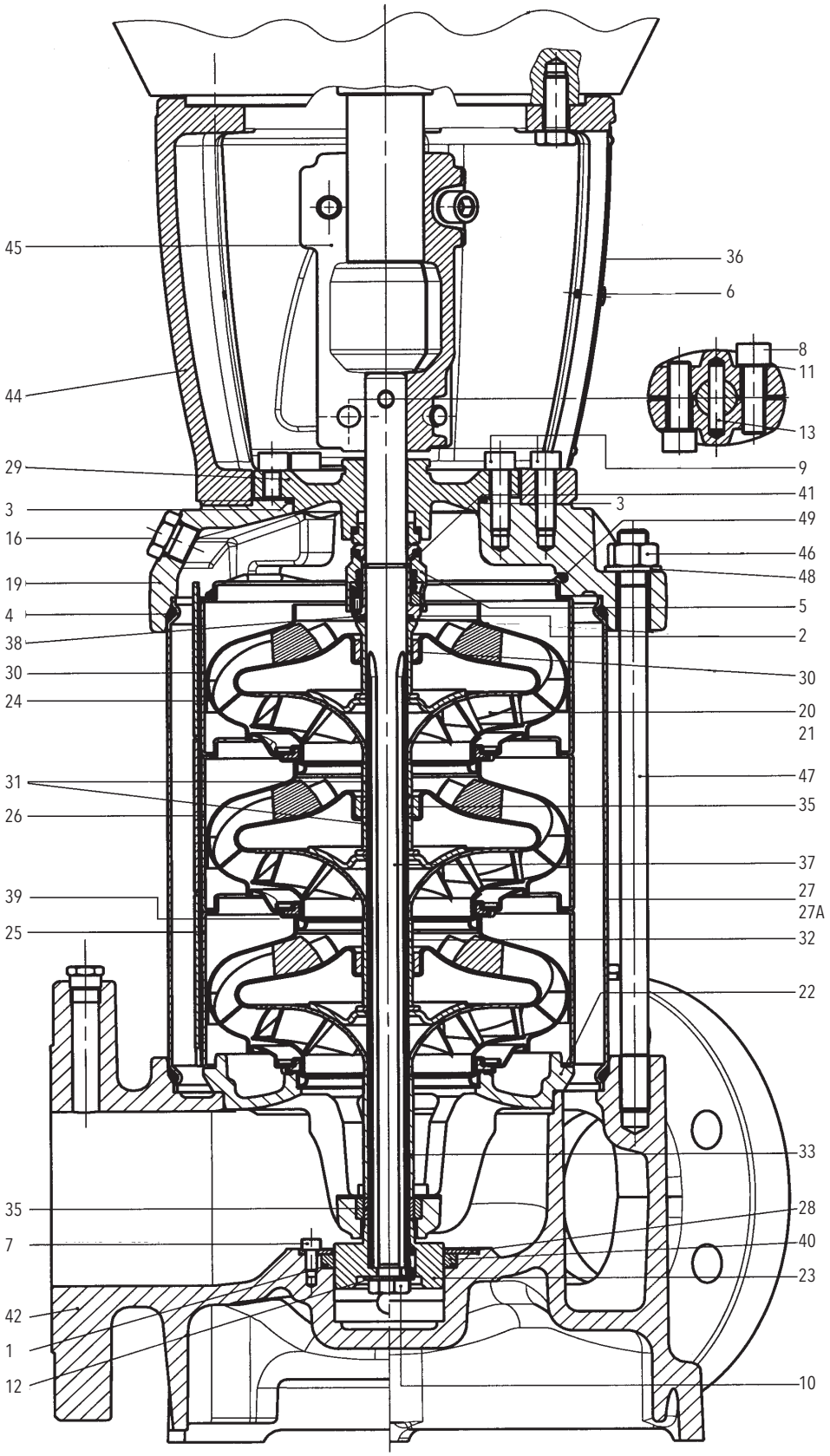

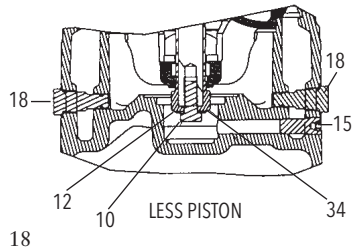

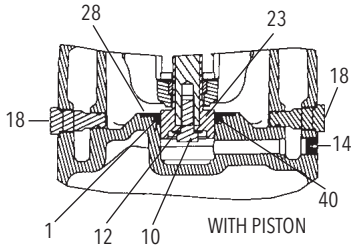

1 O-Ring, Piston Seal
2 O-Ring, Mechanical Seal
3 O-Ring, Seal housing
4 O-Ring, Sleeve
5 Mechanical Seal
5A Cartridge Seal (not shown)
6 Screw, Guard
7 Screw, Piston Holding Disc
8 Screw, Coupling
9 Screw, MA and Seal Housing
10 Screw, Impeller
11 Washer, Coupling
12 Washer, Impeller
13 Pin, Coupling
14 Plug, with Piston
15 Plug, without Piston
16 Plug, Fill
17 Plug, Vent (not shown)
18 Plug, Drain
19 Pump Head
20 Impeller, Full Diameter
21 Impeller, Reduced Diameter
22 Lower Bearing Assembly
23 Piston
24 Diffuser, Final
25 Diffuser with Carbon Bushing
26 Diffuser with Tungsten Bushing
27 Outer Sleeve, 25 Bar
27A Outer Sleeve, 40 Bar
28 Holding Disc, Piston Seal
29 Seal Housing
30 Spacer, Impeller Final
31 Spacer, Shaft Bushing
32 Spacer, Impeller
33 Spacer, Impeller Lower (66-92SV)
34 Bushing, Non-Piston
35 Tungsten Carbide Bushing
36 Coupling Guard
37 Shaft
38 Mechanical Seal Shaft Sleeve
39 Wear Ring, Impeller
40 Piston Seal
41 Stop Ring, Impeller
42 Pump Body
43 Motor Adapter Plate (not shown)
44 Motor Adapter
45 Coupling, Half
46 Nut, Tie-Rod
47 Tie-Rod
48 Washer, Tie-Rod
49 Spring, Final Diffuser

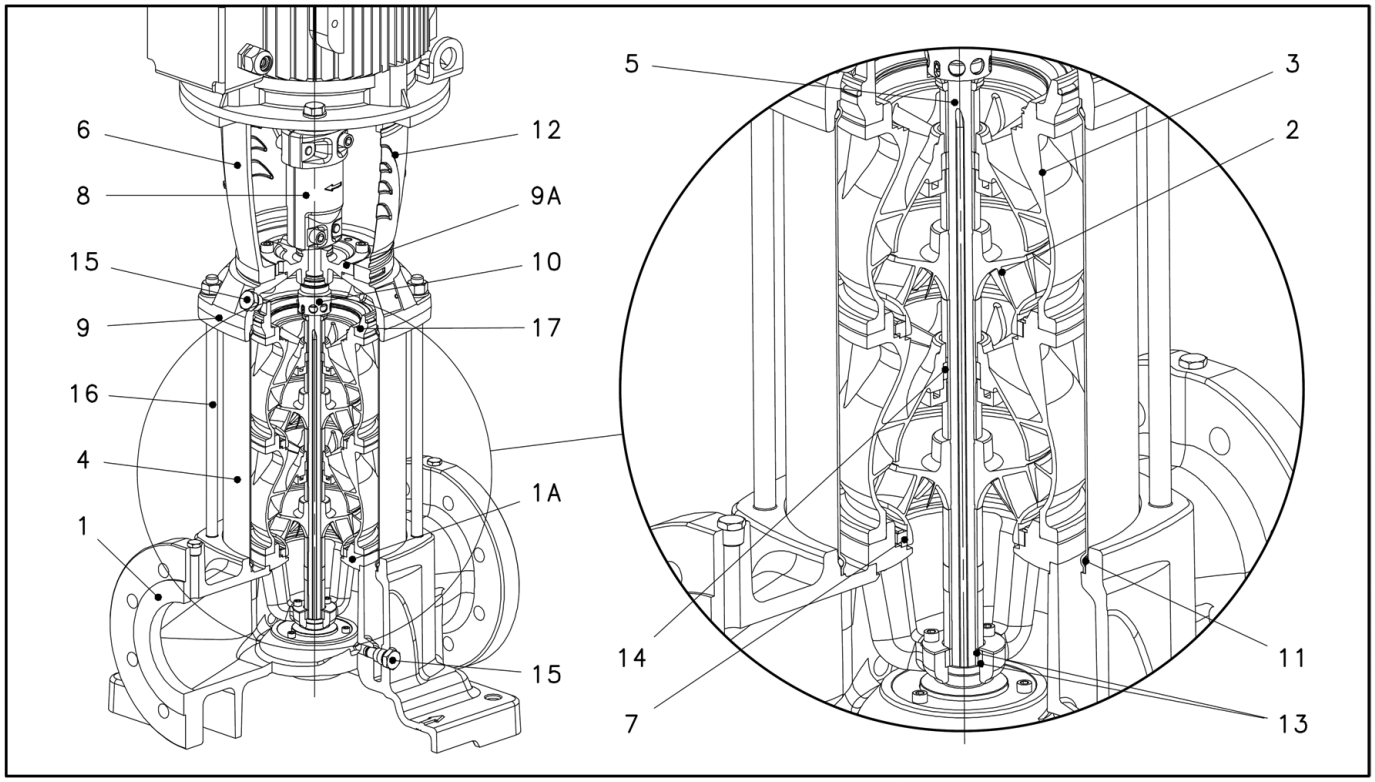

1 Pump Body
2 Impeller
3 Diffuser
4 Casing
5 Shaft
6 Adapter
7 Elastomer O-ring
8 Coupling
9 Seal Plate
10 Mechanical Seal
11 Elastomer O-ring
12 Coupling Guard
13 Shaft Sleeve and Bushing
14 Shaft Bushing
15 Fill/Drain Plugs
16 Tie Rods
17 Elastomer O-ring

Software License Agreement

BY USING THE i-Alert™ CONDITION MONITOR, YOU AGREE TO BE BOUND BY THE TERMS AND CONDITIONS OF THE FOLLOWING LICENSE AGREEMENT. PLEASE READ THIS AGREEMENT CAREFULLY.

ITT Corporation and its subsidiaries, affiliates, either directly, or through its authorized sublicensees ("ITT") grants you a limited, non-exclusive license to use the software embedded in this device ("Software") in binary executable form in the normal operation of the i-Alert™ condition monitor for monitoring the condition of any ITT Goulds Pump Models, Xylem Bell & Gossett Series 1510 Pump and Xylem eSV pump models. Title, ownership rights, and intellectual property rights in and to the Software remain in ITT or its third-party providers. You agree that this license agreement does not need to be signed for it to take effect.

You acknowledge that this Software is the property of ITT and is protected under United States of America copyright laws and international copyright treaties. You further acknowledge that the structure, organization, and code of the Software are valuable trade secrets of ITT and/or its third-party providers and that the Software in source code form remains a valuable trade secret of ITT. You agree not to decompile, disassemble, modify, reverse assemble, reverse engineer, or reduce to human readable form the Software or any part thereof or create any derivative works based on the Software. You agree not to export or re-export the Software to any country in violation of the export control laws of the United States of America.

Declaration of Conformity

We at,
Xylem Inc./Goulds Water Technology
1 Goulds Drive
Auburn, NY 13021

Declare that the following products: NPE, MCS, MCC, 3656, 3656 SP, GB, e-SV, SVI, NPO, Prime Line SP, HB, HMS, LC, NPV, LB, LBS comply with Machine Directive 06/42/EC. This equipment is intended to be incorporated with machinery covered by this directive, but must not be put into service until the machinery into which it is to be incorporated has been declared in conformity with the actual provisions of the directive.

COMMERCIAL WARRANTY

For goods sold to commercial buyers, Seller warrants the goods sold to Buyer hereunder (with the exception of membranes, seals, gaskets, elastomer materials, coatings and other "wear parts" or consumables all of which are not warranted except as otherwise provided in the quotation or sales form) will be (i) be built in accordance with the specifications referred to in the quotation or sales form, if such specifications are expressly made a part of this Agreement, and (ii) free from defects in material and workmanship for a period of one (1) year from the date of installation or twelve (12) months from the date of shipment (which date of shipment shall not be greater than eighteen (18) months after receipt of notice that the goods are ready to ship), whichever shall occur first, unless a longer period is specified in the product documentation (the "Warranty").

Except as otherwise required by law, Seller shall, at its option and at no cost to Buyer, either repair or replace any product which fails to conform with the Warranty provided Buyer gives written notice to Seller of any defects in material or workmanship within ten (10) days of the date when any defects or non-conformance are first manifest. Under either repair or replacement option, Seller shall not be obligated to remove or pay for the removal of the defective product or install or pay for the installation of the replaced or repaired product and Buyer shall be responsible for all other costs, including, but not limited to, service costs, shipping fees and expenses. Seller shall have sole discretion as to the method or means of repair or replacement. Buyer's failure to comply with Seller's repair or replacement directions shall terminate Seller's obligations under this Warranty and render the Warranty void. Any parts repaired or replaced under the Warranty are warranted only for the balance of the warranty period on the parts that were repaired or replaced. Seller shall have no warranty obligations to Buyer with respect to any product or parts of a product that have been: (a) repaired by third parties other than Seller or without Seller's written approval; (b) subject to misuse, misapplication, neglect, alteration, accident, or physical damage; (c) used in a manner contrary to Seller's instructions for installation, operation and maintenance; (d) damaged from ordinary wear and tear, corrosion, or chemical attack; (e) damaged due to abnormal conditions, vibration, failure to properly prime, or operation without flow; (f) damaged due to a defective power supply or improper electrical protection; or (g) damaged resulting from the use of accessory equipment not sold or approved by Seller. In any case of products not manufactured by Seller, there is no warranty from Seller; however, Seller will extend to Buyer any warranty received from Seller's supplier of such products.

THE FOREGOING WARRANTY IS EXCLUSIVE AND IN LIEU OF ANY AND ALL OTHER EXPRESS OR IMPLIED WARRANTIES, GUARANTEES, CONDITIONS OR TERMS OF WHATEVER NATURE RELATING TO THE GOODS PROVIDED HEREUNDER, INCLUDING WITHOUT LIMITATION ANY IMPLIED WARRANTIES OF MERCHANTABILITY AND FITNESS FOR A PARTICULAR PURPOSE, WHICH ARE HEREBY EXPRESSLY DISCLAIMED AND EXCLUDED. EXCEPT AS OTHERWISE REQUIRED BY LAW, BUYER'S EXCLUSIVE REMEDY AND SELLER'S AGGREGATE LIABILITY FOR BREACH OF ANY OF THE FOREGOING WARRANTIES ARE LIMITED TO REPAIRING OR REPLACING THE PRODUCT AND SHALL IN ALL CASES BE LIMITED TO THE AMOUNT PAID BY THE BUYER FOR THE DEFECTIVE PRODUCT. IN NO EVENT SHALL SELLER BE LIABLE FOR ANY OTHER FORM OF DAMAGES, WHETHER DIRECT, INDIRECT, LIQUIDATED, INCIDENTAL, CONSEQUENTIAL, PUNITIVE, EXEMPLARY OR SPECIAL DAMAGES, INCLUDING BUT NOT LIMITED TO LOSS OF PROFIT, LOSS OF ANTICIPATED SAVINGS OR REVENUE, LOSS OF INCOME, LOSS OF BUSINESS, LOSS OF PRODUCTION, LOSS OF OPPORTUNITY OR LOSS OF REPUTATION.

xylem
Let's Solve Water

Xylem Inc.
2881 East Bayard Street Ext., Suite A
Seneca Falls, NY 13148
Phone: (866) 673-0445
Fax: (888) 322-5877
www.xylem.com/gouldswatertechnology